DVD Stereo System

Operating Instructions

Model No. **SC-DV170**

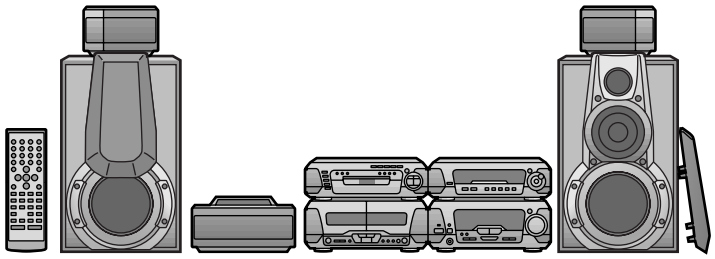

The illustrations show the model for United Kingdom and Continental Europe.

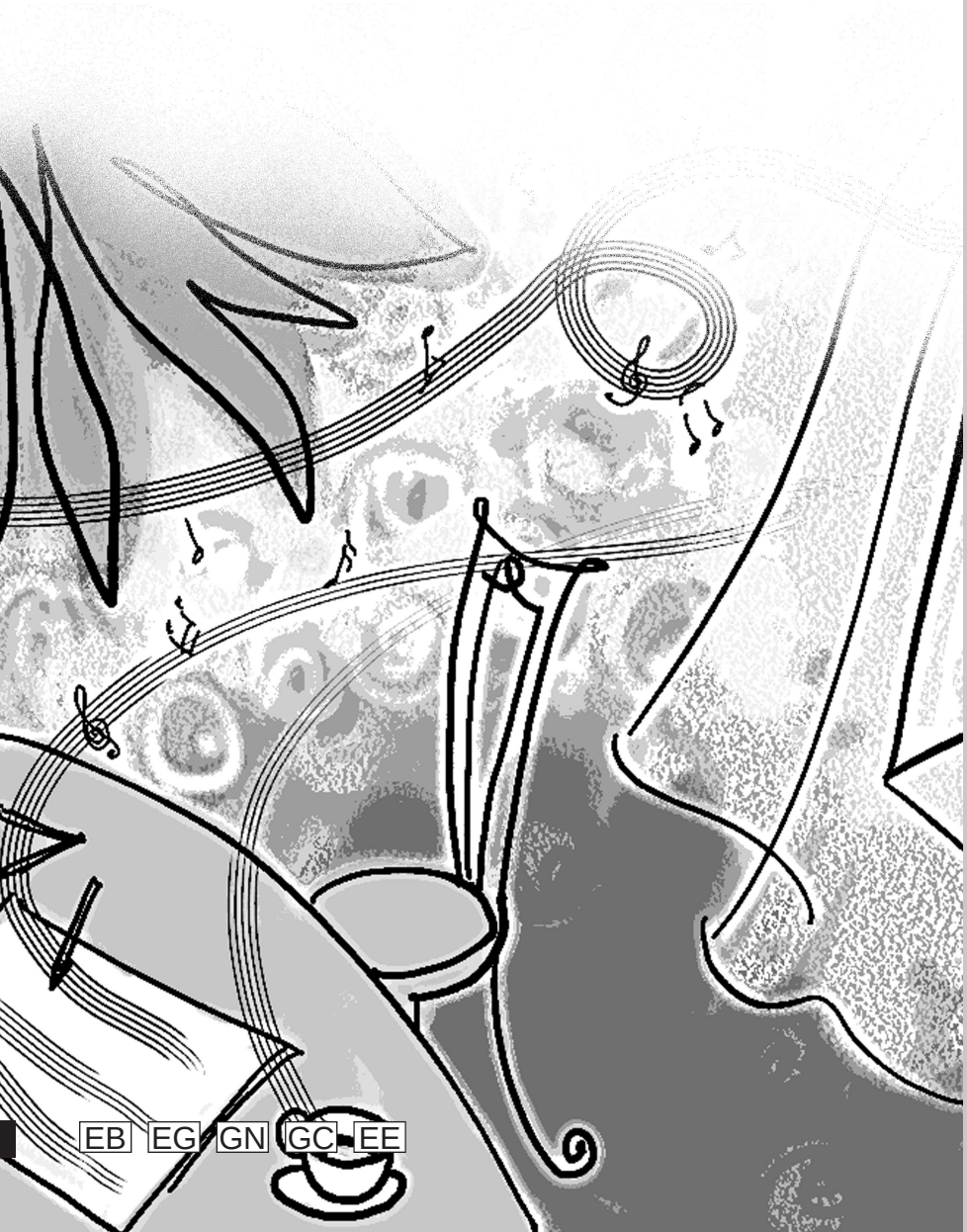

EB EG GN GC EE

Technics®

Note

"EB" on the outer packaging indicates the United Kingdom.

Before connecting, operating or adjusting this product, please read these instructions completely. Please keep this manual for future reference.

RQT5471-B

Dear customer

Thank you for purchasing this product.
For optimum performance and safety, please read these instructions carefully.
These operating instructions are applicable to the following system.

System		SC-DV170
Sound processor		SH-DV170
Stereo tuner/amplifier		SA-DV170
DVD/Video CD/CD changer		SL-DV170
Stereo cassette deck		RS-DV170
Speaker	Front	SB-EH760
	Center	SB-PC75
	Surround	SB-PS75
	Subwoofer※	SB-W85

※Except for the United Kingdom, Continental Europe, Australia and N.Z.

CAUTION!

THIS PRODUCT UTILIZES A LASER.
USE OF CONTROLS OR ADJUSTMENTS OR PERFORMANCE OF PROCEDURES OTHER THAN THOSE SPECIFIED HEREIN MAY RESULT IN HAZARDOUS RADIATION EXPOSURE.
DO NOT OPEN COVERS AND DO NOT REPAIR YOURSELF. REFER SERVICING TO QUALIFIED PERSONNEL.

CAUTION!

DO NOT INSTALL OR PLACE THIS UNIT IN A BOOKCASE, BUILT IN CABINET OR IN ANOTHER CONFINED SPACE. ENSURE THE UNIT IS WELL VENTILATED. ENSURE THAT CURTAINS AND ANY OTHER MATERIALS DO NOT OBSTRUCT THE VENTILATION TO PREVENT RISK OF ELECTRIC SHOCK OR FIRE HAZARD DUE TO OVERHEATING.

(Except for the United Kingdom, Continental Europe, Russia, Australia and N.Z.)

CAUTION!

The AC voltage is different according to the area.
Be sure to set the proper voltage in your area before use.
(For details, please refer to page 5.)

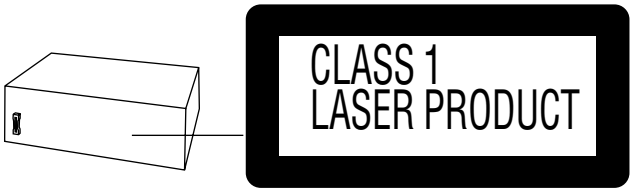

DVD/Video CD/CD changer
(Back of product)

DANGER	LASER RADIATION WHEN OPEN. AVOID DIRECT EXPOSURE TO BEAM.	(Inside of product)
DANGERS	RADIATION LASER LORSQUE OUVERT. ÉVITER TOUTE EXPOSITION AU FAISCEAU.	(Intérieur de l'appareil)
ADVARSEL	LASERSTRÅLING VED ÅBNING, NÅR SIKKERHEDSAFBRYDERE ER UDE AF FUNKTION. UNDGÅ UDSÆTTELSE FOR STRÅLING.	(Indersiden at apparatet)
VARO!	AVATTAESSA JA SUOJALUKITUS OHITETTAESSA OLET ALTTIINA LASERSÄTEILYLLE. ÄLÄ KATSO SÄTEESEEN.	(Tuotteen sisällä)
VARNING	LASERSTRÅLNING NÄR DENNA DEL ÄR ÖPPNAD OCH SPÄRREN ÄR URKOPPLAD. BETRAKTA EJ STRÅLEN.	(Apparatens insida)
ADVARSEL	LASERSTRÅLING NÅR DEKSEL ÅPNES OG SIKKERHEDSLÅS BRYTES. UNNGÅ EKSPONERING FOR STRÅLEN.	(Produktets innside)
VORSICHT	LASERSTRAHLUNG, WENN ABDECKUNG GEÖFFNET. NICHT DEM STRAHL AUSSETZEN.	(Im Inneren des Gerätes)

Supplied accessories

Please check and identify the supplied accessories.

- ☐ **AC mains lead ..... 1 pc.**
  For the United Kingdom (VJA0733)
  For Australia and N.Z. (RJA0035-X)
  For others (RJA0019-X)
- ☐ **Power plug adaptor (SJP5213-2) ..... 1 pc.**
  (Except for the United Kingdom, Continental Europe, Russia, Australia and N.Z.)
- ☐ **Remote control transmitter ..... 1 pc.**
  For the United Kingdom, Continental Europe, Australia and N.Z. (RAK-EHA32WH)
  For others (RAK-EHA33WH)
- ☐ **Remote control batteries ..... 2 pcs.**
- ☐ **FM indoor antenna ..... 1 pc.**
  For the United Kingdom, Continental Europe, and Russia (RSA0007)
  For others (RSA0006-J)
- ☐ **FM antenna plug adaptor (SJP9009) ..... 1 pc.**
  (Only for the United Kingdom)
- ☐ **AM loop antenna set (RSA0022-J) ..... 1 set**
- ☐ **Speaker cords ..... 6 pcs.**
  (REE0393) (Red•Black)
  (REE0984) (Blue•Black)
  (REE0985) (Gray•Black)
- ☐ **Video cord (RJL1P019B15)**
  For the United Kingdom and Continental Europe . . 1pc.
  For others ..... 2 pcs.
- ☐ **RCAJ adaptor (VFA0151-1) ..... 1 pc.**
  (Only for the United Kingdom and Continental Europe)

Use numbers indicated in parentheses when asking for replacement parts.

Table of contents

Before use

Safety precautions 3
Caution for AC Mains Lead 4
Installation 5
Basic connections 6
Optional antenna connections 7
Television settings 8
Front panel controls 9
The remote control 11
Setting the time 12
Turning DEMO off 12
Saving power in the standby mode 12
Region numbers 13
Types of discs 13

Basic operations

Discs 14
Normal play 14
Skip/Search/Still picture(Pause)/Slow-motion play/ Frame-by-frame viewing function 16
Changing soundtrack, subtitle languages and angles 17
Using menus to play 17
Changing the picture quality for movie viewing 18
Marking a position 18
Repeat function 19
Program play 20
Random play 21
Starting play from a specific track 21
Using GUI screens 22
The radio: manual tuning 24
The radio: preset tuning 25
Cassette tapes 26

Changing sound field and quality

Changing sound field and quality 28
Boosting the super woofer 29
Enjoying surround sound 30
DOLBY DIGITAL 32
DOLBY PRO LOGIC 33
SUPER SURROUND 34
SIMULATED STEREO 34
Surround effects 34

Recording operations

Before recording (Deck 2 only) 36
Recording discs 38
Recording the radio 39
Tape-to-tape recording 39

Convenient functions

Enjoying KARAOKE 40
Using the timers 42
Initial settings 45
Changing the sound range display 50
Muting the volume 50
Using headphones (not included) 50
External unit connections 51
Using other equipment 52

Reference

Technical specifications 53
Troubleshooting guide 54
Maintenance 55

Safety precautions

Placement

Set the system up on an even surface away from direct sunlight, high temperatures, high humidity, and excessive vibration. These conditions can damage the cabinet and other components, thereby shortening the unit's service life.

Place it at least 15 cm away from wall surfaces to avoid distortion and unwanted acoustical effects.

Do not place heavy items on the unit.

Voltage

Do not use high voltage power sources. This can overload the unit and cause a fire.

Do not use a DC power source. Check the source carefully when setting the unit up on a ship or other place where DC is used.

AC mains lead protection

Ensure the AC mains lead is connected correctly and not damaged. Poor connection and lead damage can cause fire or electric shock. Do not pull, bend, or place heavy items on the lead.

Grasp the plug firmly when unplugging the lead. Pulling the AC mains lead can cause electric shock.

Do not handle the plug with wet hands. This can cause electric shock.

Foreign matter

Do not let metal objects fall inside the unit. This can cause electric shock or malfunction.

Do not let liquids get into the unit. This can cause electric shock or malfunction. If this occurs, immediately disconnect the unit from the power supply and contact your dealer.

Do not spray insecticides onto or into the unit. They contain flammable gases which can ignite if sprayed into the unit.

Service

Do not attempt to repair this unit by yourself. If sound is interrupted, indicators fail to light, smoke appears, or any other problem that is not covered in these instructions occurs, disconnect the AC mains lead and contact your dealer or an authorized service center. Electric shock or damage to the unit can occur if the unit is repaired, disassembled or reconstructed by unqualified persons.

Extend operating life by disconnecting the unit from the power source if it is not to be used for a long time.

Disc symbols used in these operating instructions

The functions you can use depend on the type of disc you play.

These marks are used to indicate which type of disc is explained.

DVD: Feature can be used with DVD-Video

V-CD: Feature can be used with Video CD

CD: Feature can be used with Audio CD

Some features cannot be used even if these symbols are indicated.

(For United Kingdom)

("EB" area code model only)

For your safety, please read the following text carefully.

This appliance is supplied with a moulded three pin mains plug for your safety and convenience.
A 5-ampere fuse is fitted in this plug.
Should the fuse need to be replaced please ensure that the replacement fuse has a rating of 5-ampere and that it is approved by ASTA or BSI to BS1362.
Check for the ASTA mark ⓐ or the BSI mark ⓚ on the body of the fuse.

If the plug contains a removable fuse cover you must ensure that it is refitted when the fuse is replaced.
If you lose the fuse cover the plug must not be used until a replacement cover is obtained.
A replacement fuse cover can be purchased from your local dealer.

CAUTION!
IF THE FITTED MOULDED PLUG IS UNSUITABLE FOR THE SOCKET OUTLET IN YOUR HOME THEN THE FUSE SHOULD BE REMOVED AND THE PLUG CUT OFF AND DISPOSED OF SAFELY.
THERE IS A DANGER OF SEVERE ELECTRICAL SHOCK IF THE CUT OFF PLUG IS INSERTED INTO ANY 13-AMPERE SOCKET.

If a new plug is to be fitted please observe the wiring code as stated below.
If in any doubt please consult a qualified electrician.

IMPORTANT

The wires in this mains lead are coloured in accordance with the following code:
Blue: Neutral, Brown: Live.
As these colours may not correspond with the coloured markings identifying the terminals in your plug, proceed as follows:
The wire which is coloured Blue must be connected to the terminal which is marked with the letter N or coloured Black or Blue.
The wire which is coloured Brown must be connected to the terminal which is marked with the letter L or coloured Brown or Red.

WARNING: DO NOT CONNECT EITHER WIRE TO THE EARTH TERMINAL WHICH IS MARKED WITH THE LETTER E, BY THE EARTH SYMBOL ⏚ OR COLOURED GREEN OR GREEN/YELLOW.

THIS PLUG IS NOT WATERPROOF—KEEP DRY.

Before use

Remove the connector cover.

How to replace the fuse

The location of the fuse differ according to the type of AC mains plug (figures A and B). Confirm the AC mains plug fitted and follow the instructions below.
Illustrations may differ from actual AC mains plug.

1. Open the fuse cover with a screwdriver.

Figure A

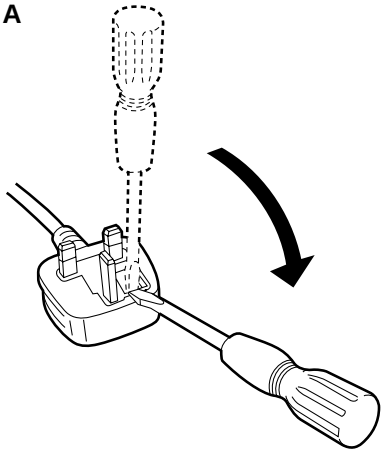

Figure B

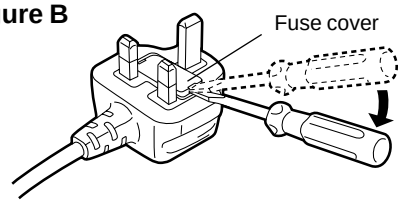

2. Replace the fuse and close or attach the fuse cover.

Figure A

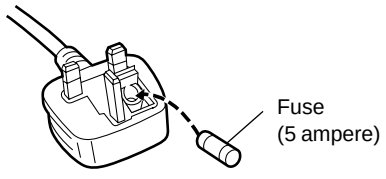

Figure B

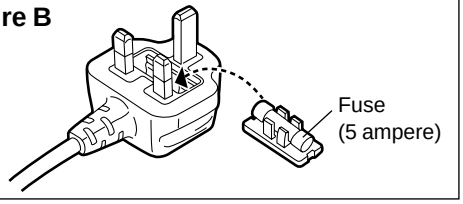

Installation

A Set the voltage

(Except for the United Kingdom, Continental Europe, Russia, Australia and N.Z.)

Be sure to disconnect the AC mains lead before setting the voltage. Use a flat-head screwdriver to turn the voltage selector to the appropriate position for the area in which this system is to be used.

If the power supply in your area is 115 V, 120 V or 230 V, set the voltage selector as follows:

- For 115 V: set to 110 V
- For 120 V: set to 127 V
- For 230 V: set to 220–230 V

Note that the unit will be seriously damaged if this setting is not made correctly.

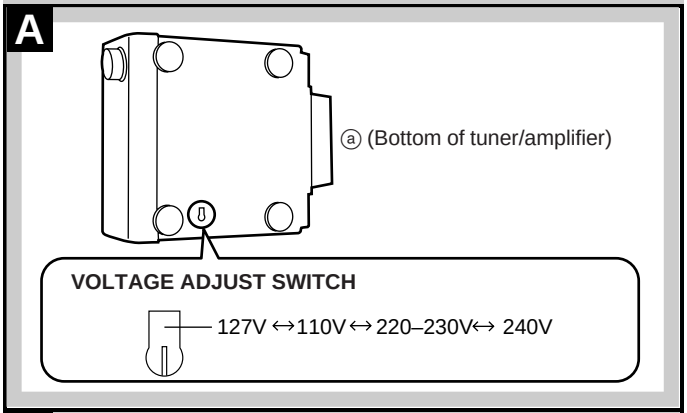

Locating the components

B Side-by-side set-up/C Stacking

Note

Left and right front speakers are exactly the same.

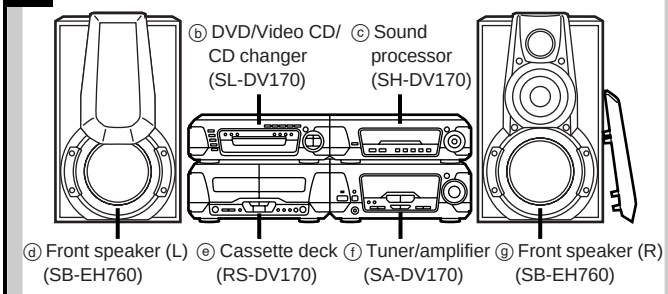

Use only the supplied speakers.

The combination of the system and the speakers provides the best sound. Using other speakers can damage the unit and sound quality will be negatively affected.

Caution

- **Use the speakers only with the recommended system. Failure to do so may lead to damage to the amplifier and/or the speakers, and may result in the risk of fire. Consult a qualified service person if damage has occurred or if you experience a sudden change in performance.**
- **Do not attempt to attach these speakers to walls using methods other than those described in this manual.**

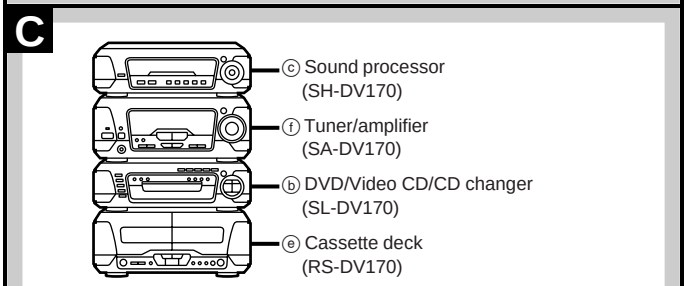

D Placement of center/surround speakers (and subwoofer)

Center speaker

Place the center speaker (ⓗ) directly above the television.

Surround speakers

Place the surround speakers (ⓘ, ⓙ) on either side of the listening position, or slightly to the rear, about 1 meter higher than ear level.

Place the speakers with the Technics logo facing toward the listening position.

However the position should be adjusted to your personal preference, because the effect varies to some degree depending upon the type of music and the music source.

Note

If you are unable to position the surround speakers as recommended, you can put them near the front speakers and still achieve a surround-like effect (➡ page 35, “VIRTUAL REAR SURROUND”).

E Attaching to a wall

Set speaker onto screws and slide through the bracket to lock into position.

Note

The wall or pillar on which the speaker systems are to be attached should be capable of supporting 5 kg.

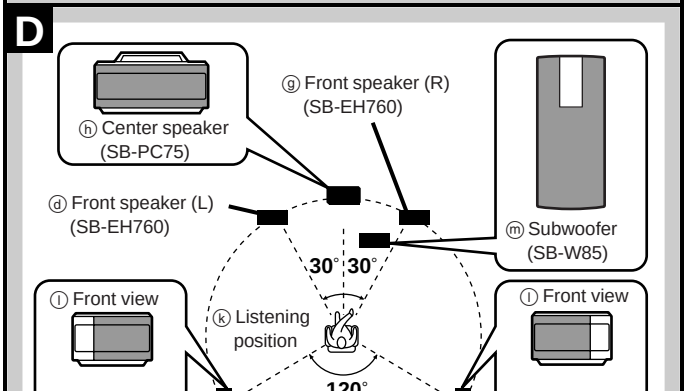

The front, center, and surround speakers should be placed at approximately the same distance from the listening position. The angles in the diagram are approximate.

Subwoofer

(Included only for areas other than the United Kingdom, Continental Europe, Australia and N.Z.)

The subwoofer (ⓜ) can be placed anywhere as long as it is standing and not too far from the television.

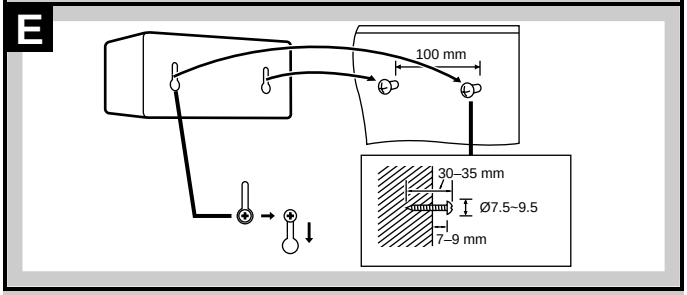

If irregular coloring occurs on your television

Turn the television off for about 30 minutes.

The television’s demagnetizing function should correct the problem. If it persists, move the speakers farther away from the television.

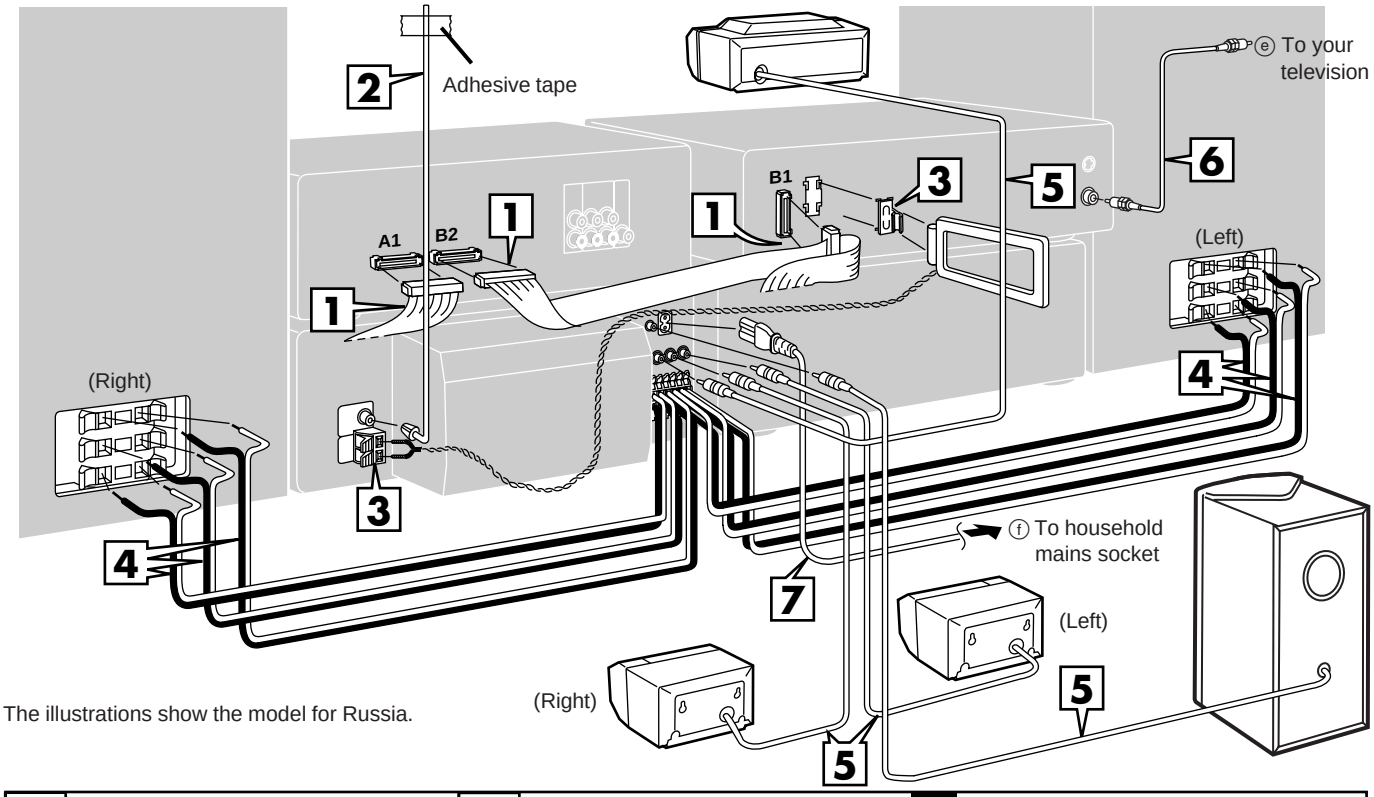

The illustrations show the model for Russia.

1

ⓐ **To connect cables** ⓓ **To unplug cables**
Hold the connector on both ends and pull it out.

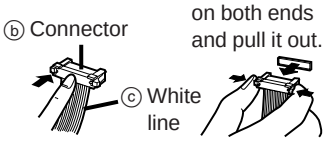

2

(For the United Kingdom, Continental Europe, and Russia)

(For others)

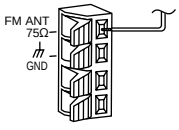

3

①

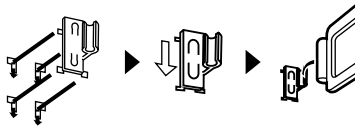

②

(For the United Kingdom, Continental Europe, and Russia)

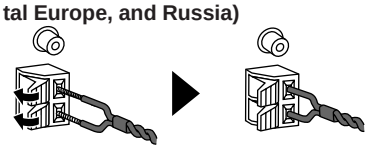

(For others)

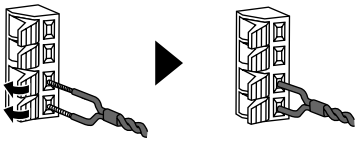

4

Tuner/amplifier side

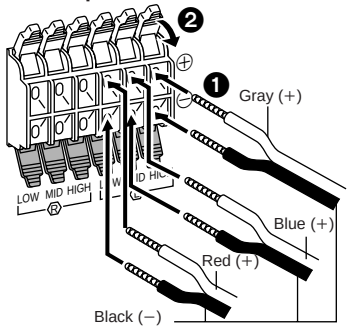

Speaker side

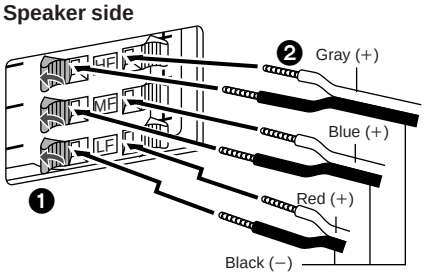

5

Subwoofer: Except for the United Kingdom, Continental Europe, Australia and N.Z.

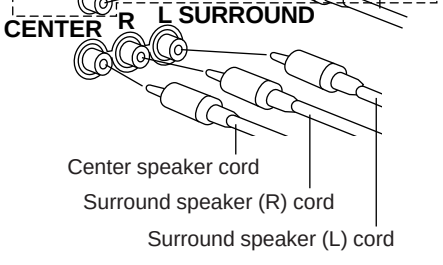

A

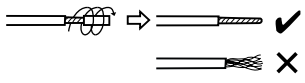

B

(Only for the United Kingdom and Continental Europe)

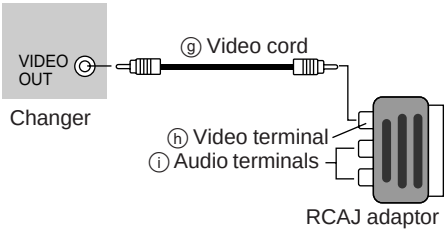

C

(Except for the United Kingdom and Continental Europe)

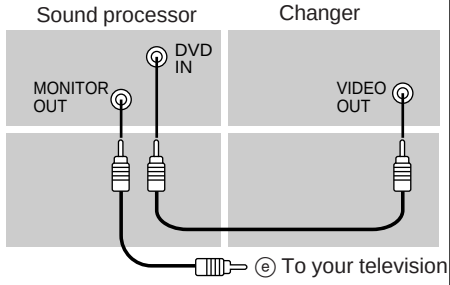

D

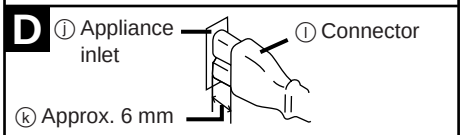

E

(Except for the United Kingdom, Continental Europe, Russia, Australia and N.Z.)

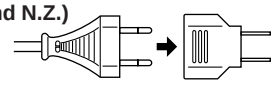

Before connection
- Do not connect the AC mains lead until all other connections are complete.
- To prepare the AM loop antenna and speaker cords (and FM antenna for areas other than the United Kingdom, Continental Europe, and Russia), twist the vinyl tip and pull off (A).

1 Flat cables.

Keep the cables as flat as possible against the back of the unit.

Note

Connect the black connectors to the black terminals and the blue connector to the blue terminal. Incorrect connection of the flat cables can damage the unit.

2 FM antenna.

Fix the other end of the antenna where reception is best.

3 AM loop antenna.

① Attach the antenna holder to the rear panel of the changer . Then clamp the antenna into the antenna holder.
② Connect the antenna to the rear panel of the tuner/ amplifier.

Keep loose antenna cord away from other wires and cords.

4 Front (L/R) speaker cords.

Connect the cords to the terminals of the same colour.

Note

- To prevent damage to circuitry, never short-circuit positive (+) to negative (−) speaker wires.
- Be sure to connect only positive (red, blue or gray) wires to positive (+) terminals and negative (black) wires to negative (−) terminals.

5 Surround and center speaker cords. Subwoofer cord. (Except for the United Kingdom, Continental Europe, Australia and N.Z.)

6 Video cord(s).

B Only for the United Kingdom and Continental Europe

Use the RCAJ adaptor (included) if your television has a 21-pin SCART terminal.

You do not have to connect anything to the AUDIO terminals.

C Except for the United Kingdom and Continental Europe

Use this connection if you have connected a VCR or Laser Disc player (➡ page 51 D). This enables you to control the video and audio from this equipment with [INPUT SELECTOR] (➡ page 52).

(For the United Kingdom only)
READ THE CAUTION FOR THE AC MAINS LEAD ON PAGE 4 BEFORE PROCEEDING TO STEP 7.

7 AC mains lead.

D Insertion of connector

Even when the connector is perfectly inserted, depending on the type of inlet used, the front part of the connector may jut out as shown in the drawing.

However there is no problem using the unit.

E Except for the United Kingdom, Continental Europe, Russia, Australia and N.Z.

If the power plug will not fit your socket, use the power plug adaptor (included).

Note

The included AC mains lead is for use with this unit only. Do not use it with other equipment.

For your reference:

Information you enter into the unit's memory, except for time, remains intact for up to two weeks after the mains lead is disconnected.

Optional antenna connections

Use outdoor antennas if radio reception is poor.

FM outdoor antenna

Note

- Disconnect the FM indoor antenna.
- The antenna should be installed by a competent technician.

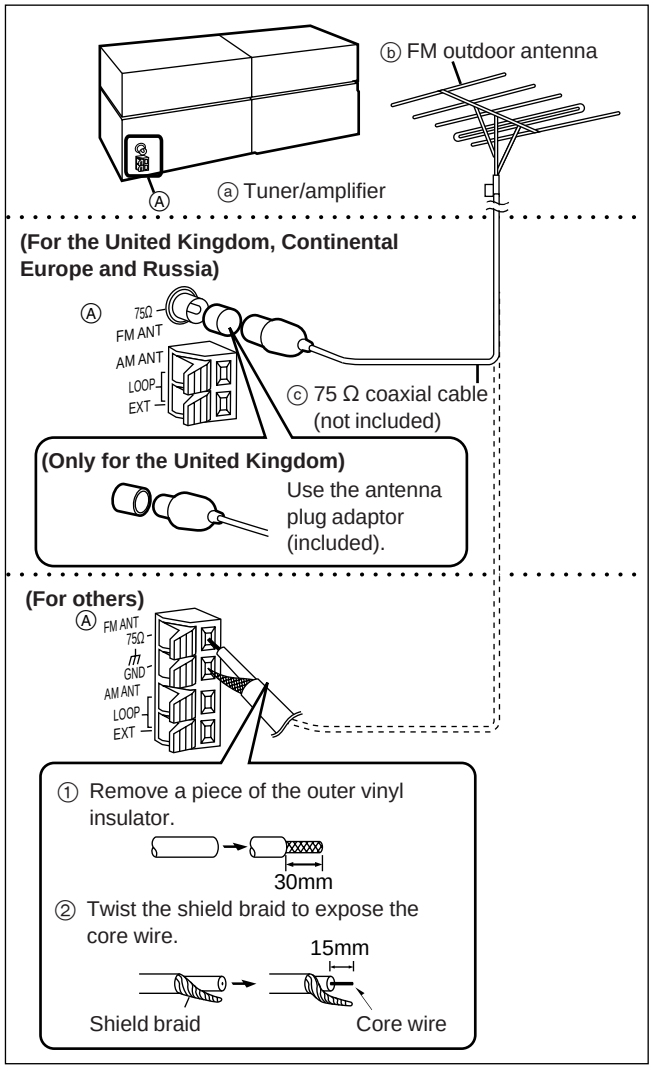

AM outdoor antenna

Run a piece of vinyl wire horizontally across a window or other convenient location.

Note

- Leave the loop antenna connected.
- Disconnect the antenna when the unit is not in use. Do not use the antenna during an electrical storm.

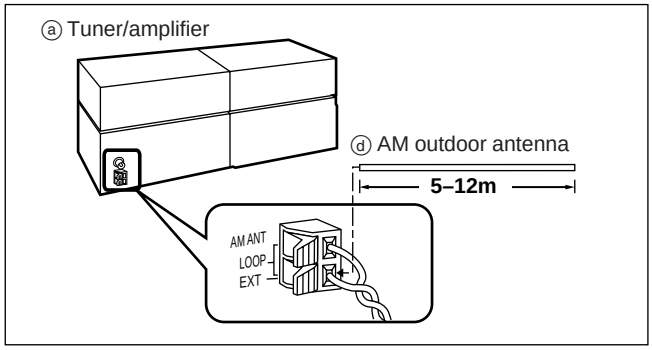

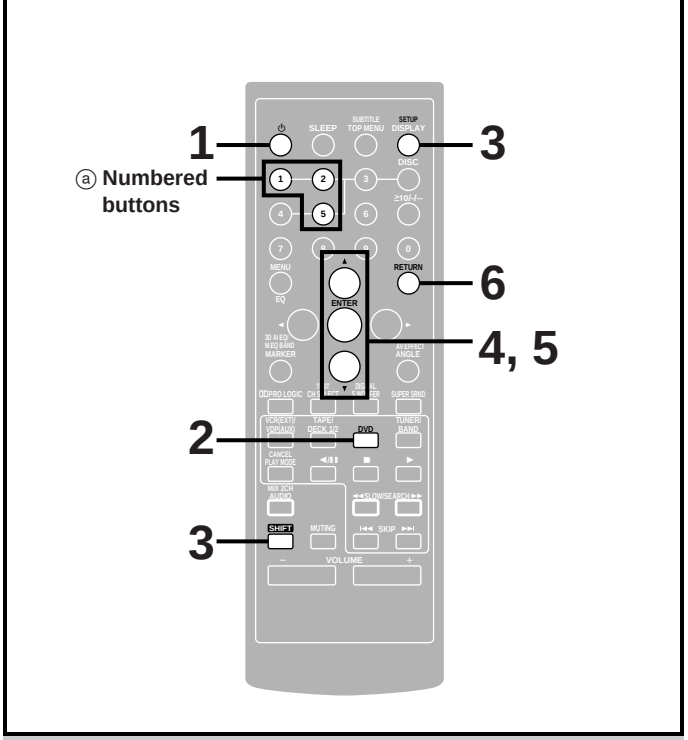

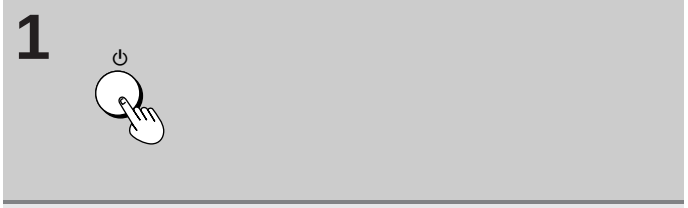

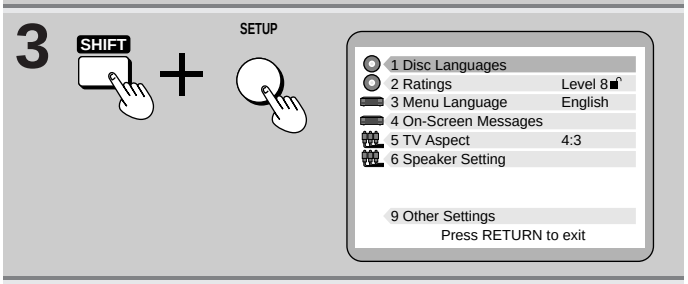

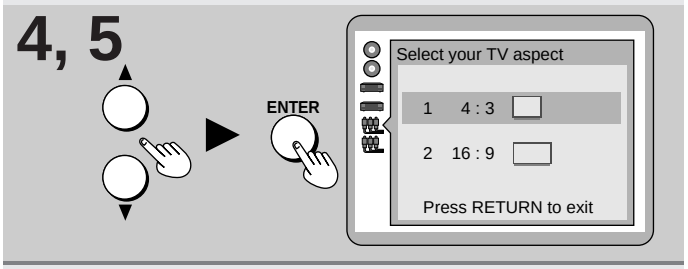

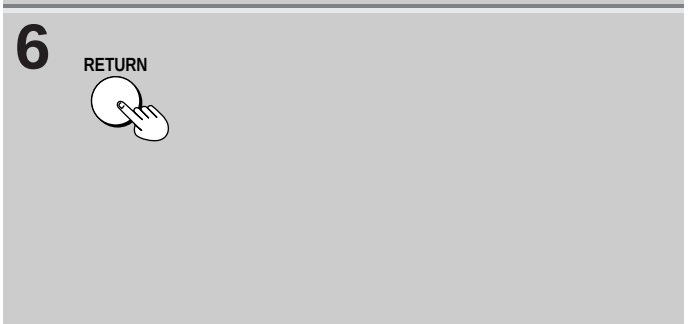

Television settings

Remote control only

The menu language has been factory preset to English. You can change the language by going to “3 Menu Language” of the initial settings screen (➡ page 46).

Set the screen size to suit your television. The initial setting is for a regular television with an aspect ratio of 4:3.
You do not have to change the setting if you have this kind of television.

Preparation:
Turn on the television and switch the video input mode of the television to suit the type of connection you have made (e.g., VIDEO 1).

1 **Press [⏻] to turn the unit on.**

2 **Press [DVD] to select “DVD” as the source.**

3 **While stopped**
Press [SHIFT] + [SETUP] to display the initial settings screen.

4 **Press [▲] or [▼] to highlight “5 TV Aspect”, and press [ENTER].**

5 **Press [▲] or [▼] to highlight the required size, and press [ENTER].**
4:3: Regular television
16:9: Widescreen television
The initial settings screen is shown after you make your selection.

6 **Press [RETURN] to exit.**

You can also do steps 4 and 5 with the numbered buttons.
Press the number next to the selected item.
For example, in step 4, press [5] to select “5 TV Aspect”.

Front panel controls

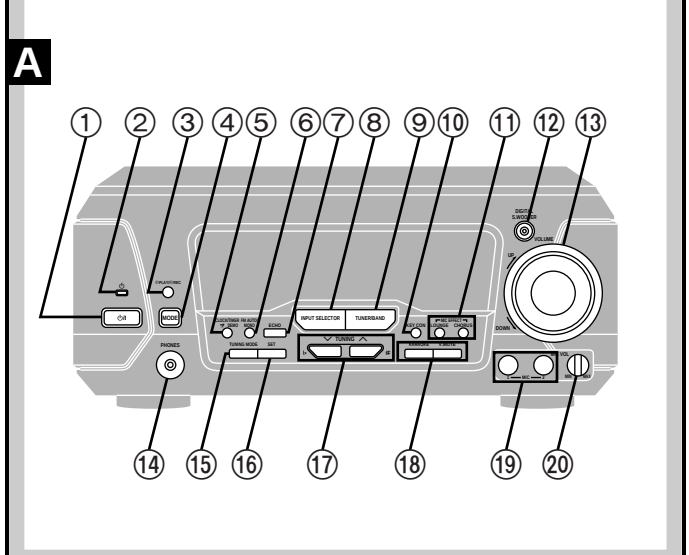

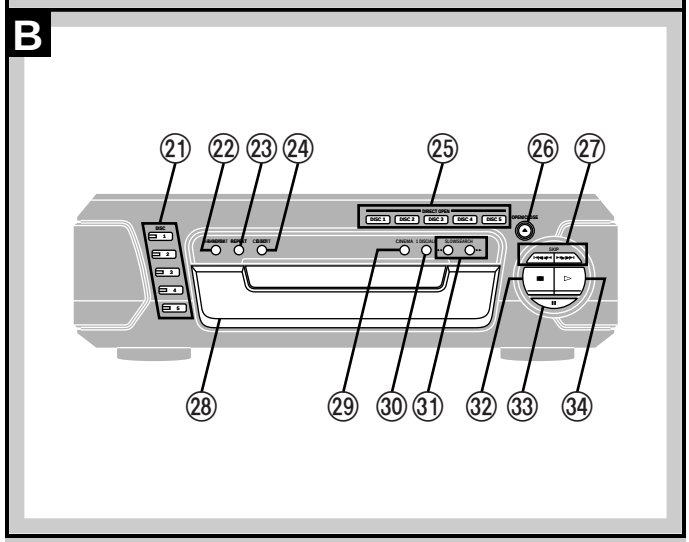

A Tuner/amplifier

⑦, ⑩, ⑪, ⑲ and ⑳: Not available for the United Kingdom, Continental Europe, Australia and N.Z.

① **Standby/on switch (⏻/I)** 8
Press to switch the unit from on to standby mode or vice versa. In standby mode, the unit is still consuming a small amount of power.

② **Standby indicator (⏻)**
When the unit is connected to the AC mains supply, this indicator lights up in standby mode and goes out when the unit is turned on.

③ **Play timer/record timer button and indicator (🕘PLAY/🕘REC)** 42, 43

④ **ECO mode button (MODE)** 12

⑤ **Clock/timer, Demo button (CLOCK/TIMER, –DEMO)** 12, 42

⑥ **FM mode button (FM AUTO/MONO)** 24

⑦ **Except for the United Kingdom, Continental Europe, Australia and N.Z.**
Echo button (ECHO) 41

⑧ **Source input button (INPUT SELECTOR)** 52

⑨ **Tuner/band button (TUNER/BAND)** 24

⑩ **Except for the United Kingdom, Continental Europe, Australia and N.Z.**
Key control button (KEY CON) 41

⑪ **Except for the United Kingdom, Continental Europe, Australia and N.Z.**
MIC effect buttons (MIC EFFECT, LOUNGE, CHORUS) 41

⑫ **Digital super woofer button and indicator (DIGITAL S.WOOFER)** 29

⑬ **Volume control (VOLUME)** 14

⑭ **Headphone jack (PHONES)** 50

⑮ **Tuning mode button (TUNING MODE)** 24

⑯ **Set button (SET)** 12

⑰ **For the United Kingdom, Continental Europe, Australia and N.Z.**
Tuning buttons (∨, ∧ TUNING) 12, 24
For others
Tuning, Key up/down buttons (∨, ∧ TUNING, ♭, ♯) 12, 24, 41

⑱ **For the United Kingdom and Continental Europe**
RDS display mode buttons (RDS, PS–DISP MODE–PTY) 24
For Australia and N.Z.
No buttons.
For others
KARAOKE, Voice mute buttons (KARAOKE, V.MUTE) 40

⑲ **Except for the United Kingdom, Continental Europe, Australia and N.Z.**
Microphone jacks (MIC, 1, 2) 40

⑳ **Except for the United Kingdom, Continental Europe, Australia and N.Z.**
Microphone volume control (MIC VOL) 40

B DVD/Video CD/CD changer

㉑ **Disc select buttons and indicators (DISC, 1–5)** 14
Green: Indicates that the tray is ready to play its disc or to be opened.

㉒ **A-B repeat button (A-B REPEAT)** 19

㉓ **Repeat button (REPEAT)** 19

㉔ **CD edit button (CD EDIT)** 38

㉕ **Disc direct open buttons (DIRECT OPEN, DISC 1– DISC 5)** 14

㉖ **Disc tray open/close button (⏏ OPEN/CLOSE)** 14

㉗ **Skip buttons (⏮, ⏭ SKIP)** 16

㉘ **Disc tray** 14

㉙ **Cinema mode button (CINEMA)** 18

㉚ **Disc management select button (1 DISC/ALL)** 15

㉛ **Slow/search buttons (◀◀, ▶▶ SLOW/SEARCH)** 16

㉜ **Stop button (■)** 14

㉝ **Pause button (❚❚)** 16

㉞ **Play button and indicator (▷)** 15
The colour of the indicator depends on the operation taking place.
If stopped: orange
If playing: green
If paused: flashes green
RESUME on: flashes orange

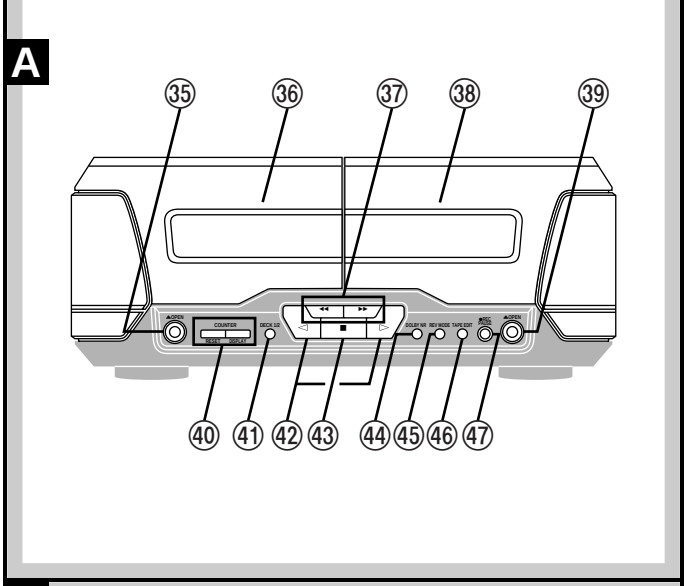

A Cassette deck

㉟ **Deck 1 cassette holder open button (⏏ OPEN)** **26**
㊱ **Deck 1 cassette holder**
㊲ **Fast forward/rewind buttons (◀◀, ▶▶)** **27**
㊳ **Deck 2 cassette holder**
㊴ **Deck 2 cassette holder open button (⏏ OPEN)** **26**
㊵ **Counter reset, display buttons (COUNTER, RESET, DISPLAY)** **36**
㊶ **Deck 1/deck 2 select button (DECK 1/2)** **26**
㊷ **Playback buttons and indicators (◁, ▷)** **26**
The colour of the indicators depends on the operation taking place.
If stopped, fast-forwarding or rewinding: orange
If playing or recording: green
While carrying out TPS or recording is on standby: flashes green
㊸ **Stop button (■)** **26**
㊹ **Dolby noise reduction button (DOLBY NR)** **26**
㊺ **Reverse mode button (REV MODE)** **26**
㊻ **Tape edit button (TAPE EDIT)** **39**
㊼ **Record pause button (● REC PAUSE)** **38**

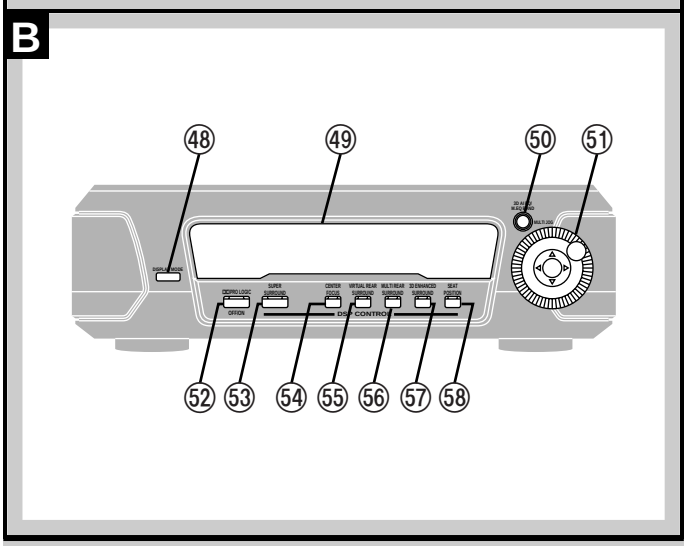

B Sound processor

㊽ **Display mode button (DISPLAY MODE)** **50**
㊾ **Display**
㊿ **3D AI EQ, M.EQ BAND button (3D AI EQ/M.EQ BAND)** **28**
(51) **Jog control and joystick (MULTI JOG)** **28**
(52) **DOLBY PRO LOGIC button and indicator (DD PRO LOGIC, OFF/ON)** **33**
(53) **Super surround button and indicator (SUPER SURROUND)** **34**
(54) **Center focus button and indicator (CENTER FOCUS)** . . . **35**
(55) **Virtual rear surround button and indicator (VIRTUAL REAR SURROUND)** **35**
(56) **Multi rear surround button and indicator (MULTI REAR SURROUND)** **35**
(57) **3D enhanced surround button and indicator (3D ENHANCED SURROUND)** **35**
(58) **Seat position button and indicator (SEAT POSITION)** **34**

The remote control

A Controls

Buttons such as ❶ and ㉜ function in the same way as the corresponding controls on the main unit.

- ㊾ **Sleep timer button (SLEEP)** 44
- ㊿ **Numbered buttons (1–9, 0, ≥10/-/--)** 14
- (61) **Menu, EQ button (MENU, EQ)** 17, 28
- (62) **Cursor buttons (◄, ►, ▲, ▼)** 8, 45
- (63) **Marker, 3D AI EQ, M.EQ BAND button (MARKER, 3D AI EQ/M.EQ BAND)** 18, 28
- (64) **Channel select, Test signal button (CH SELECT, TEST)** 32
- (65) **Input select button [VCR (EXT)/VDP (AUX)]** 52
- (66) **TAPE, Deck 1/deck 2 select button (TAPE/DECK 1/2)** 26
- (67) **Play mode, Cancel button (PLAY MODE, CANCEL)** . . 18, 20
- (68) **Disc pause, Tape reverse play button (◄/❚❚)** 16, 26
- (69) **Audio select, 2 channel down mixing button (AUDIO, MIX 2CH)** 17, 32
- (70) **Except for the United Kingdom, Continental Europe, Australia and N.Z.**
  KARAOKE button (KARAOKE) 40
- (71) **Shift button (SHIFT)**
  To operate functions labeled in orange, press [SHIFT] and then the corresponding button at the same time.
- (72) **Muting button (MUTING)** 50
- (73) **Top menu, Subtitle select button (TOP MENU, SUBTITLE)** 17
- (74) **GUI display, Initial setting button (DISPLAY, SETUP)** . . 8, 22, 45
- (75) **Disc button (DISC)** 21
- (76) **For the United Kingdom, Continental Europe, Australia and N.Z.**
  Return button (RETURN) 8, 45
  For others
  Return, Karaoke effect button (RETURN, KARAOKE EFFECT) 8, 41, 45
- (77) **Enter button (ENTER)** 8, 45
- (78) **Angle select, AV effect button (ANGLE, AV EFFECT)** . . 17, 34
- (79) **DVD button (DVD)** 20
- (80) **Disc play, Tape forward play button (►)** 15, 26
- (81) **Disc stop, Tape stop button (■)** 14, 26
- (82) **Disc slow/search, Tape fast forward/rewind buttons (◄◄, ►► SLOW/SEARCH)** 16, 27

B Batteries

- Insert so the poles (+ and −) match those in the remote control.
- Do not use rechargeable type batteries.

Do not;

- mix old and new batteries.
- use different types at the same time.
- heat or expose to flame.
- take apart or short circuit.
- attempt to recharge alkaline or manganese batteries.
- use batteries if the covering has been peeled off.

Mishandling of batteries can cause electrolyte leakage which can damage items the fluid contacts and may cause a fire.
If electrolyte leaks from the batteries, consult your dealer.
Wash thoroughly with water if electrolyte comes in contact with any part of your body.

Remove if the remote control is not going to be used for a long period of time. Store in a cool, dark place.
Replace if the unit does not respond to the remote control even when held close to the front panel.

If the battery lid comes loose, slide it back into place horizontally.

C Use

Aim at the sensor, avoiding obstacles, at a maximum range of 7 meters directly in front of the unit.

- Keep the transmission window and the unit's sensor free from dust.
- Operation can be affected by strong light sources, such as direct sunlight, and the glass doors on cabinets.

Do not;

- put heavy objects on the remote control.
- take the remote control apart.
- spill liquids onto the remote control.

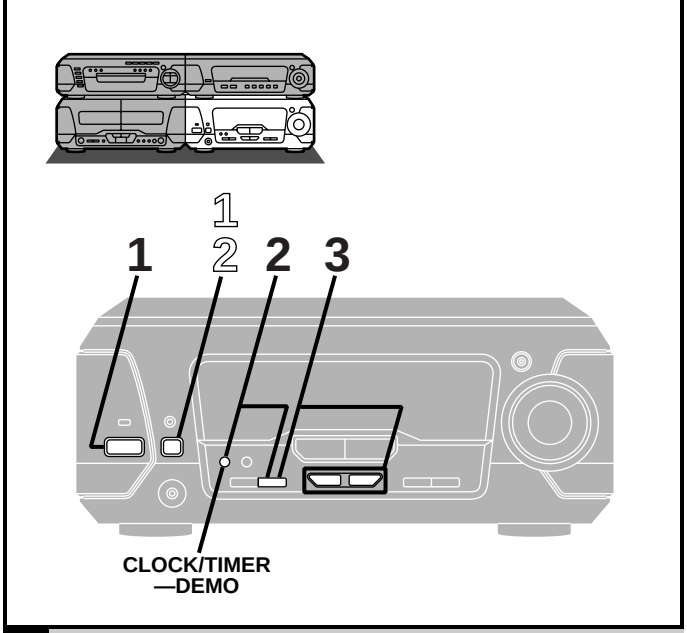

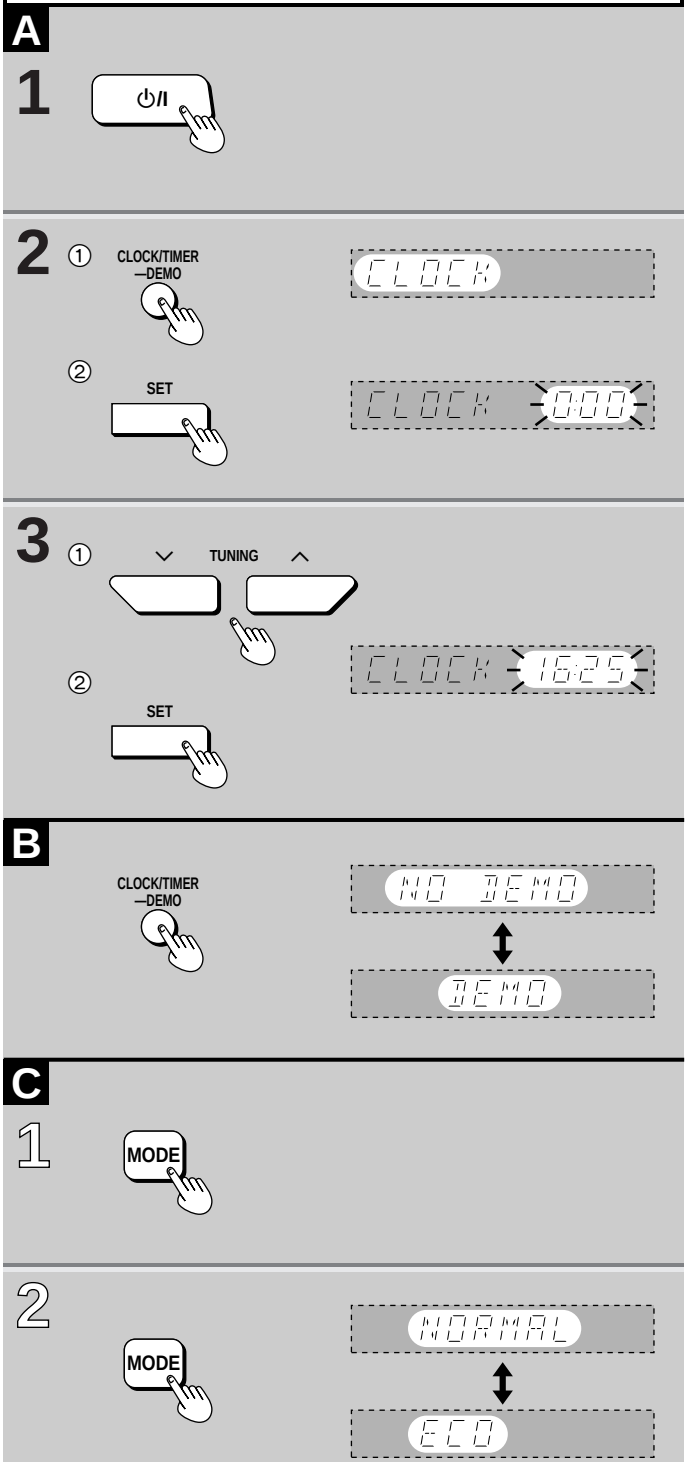

A Setting the time

This is a 24-hour clock.
The example shows how to set the clock for 16:25 (4:25 p.m.).

1 Press [⏻/I] to turn the unit on.

2 ① Press [CLOCK/TIMER, –DEMO] to display “CLOCK”.
Each time you press the button:
CLOCK→🕘PLAY→🕘REC→Original display

② Within 7 seconds
Press [SET].

3 ① Press [TUNING (∨ or ∧)] to set the time.
The time display can be changed in one minute units by tapping the buttons, and quickly by holding down the buttons.

② Press [SET].

The time is set and the original display is restored.

Displaying the clock
Press [CLOCK/TIMER, –DEMO].
The clock is shown for about 5 seconds.

B Turning DEMO off

A demonstration of the display is shown if you have not set the clock. Turn DEMO off to get the most from ECO mode (see below).

While the unit is on:

Press and hold [CLOCK/TIMER, –DEMO] until “NO DEMO” is displayed.
Each time you press and hold the button:
NO DEMO (off)⇄DEMO (on)

C Saving power in the standby mode

Set the unit to reduce energy consumption in the standby mode (11 W→0.5 W for the United Kingdom, Continental Europe, Russia, Australia and N.Z. or 11 W→1.0 W for others).

While the unit is on:

1 Press [MODE].
The current mode is displayed.

2 Within 5 seconds
Press [MODE] to display “ECO”.
Each time you press the button:
NORMAL (off)⇄ECO (on)

ECO: The clock is not displayed in the standby mode. The “⏻” and the “🕘PLAY/🕘REC” indicators still light.

Note
The mode can be switched to ECO when the unit is in standby but it cannot be switched back to NORMAL.

A Region numbers

Region numbers are allocated to DVD players and software according to where they are sold.
DVDs can be played on this unit if their region number is the same or includes the same number, or if the DVD is marked “ALL”.
Confirm the region number for this unit before choosing discs. The number for this unit is indicated on the rear panel of the DVD/Video CD/CD changer.
ⓒ **Discs that can be played by the unit shown in this example.**

A
ⓐ DVD/Video CD/CD changer
(Back of product)

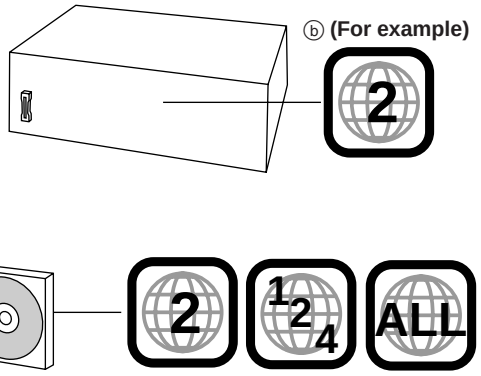

B Types of discs

This system can play discs bearing any of the marks shown.

This system does not have a DTS decoder so it cannot play audio encoded with DTS.

This system cannot play the following discs:

- DVD with an unsuitable region number
- DVD-Audio
- DVD-ROM
- DVD-R
- DVD-RAM
- DVD+RW
- DVD-RW
- DIVX Video Disc
- VSD
- CD-ROM
- CDV
- CVD
- CD-G
- CD-RW
- SACD
- SVCD
- CD-R
- Photo CD, etc.

B

C Type of disc for the type of connected TV

DVDs and Video CDs are recorded using either PAL or NTSC.
Refer to this table when selecting discs.
The picture will appear on the screen as shown here.

C

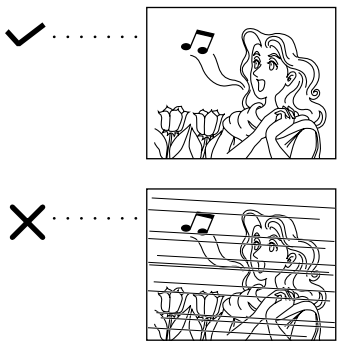

TV type	Disc	TV Monitor	
		For Russia	For others
Multi-system TV	PAL	✔	✔
	NTSC	✔	✔※4
NTSC TV	PAL	×	×
	NTSC	✔	×
PAL TV	PAL	✔※1	✔
	NTSC	✔※1※2	✔※3

※1 You may not able to perform operations that require interaction with the television (e.g., initial settings) because on-screen messages are not displayed correctly.
※2 In “9 Other Settings”–“6 NTSC Disc Output”, select “1 PAL60” (➡ page 46). If your television is not equipped to handle PAL 525/60 signals the picture will not be shown correctly.
※3 The factory setting for NTSC disc output is “PAL60”, so no changes to the initial settings are necessary.
※4 If you select “2 NTSC” in “9 Other Settings”–“6 NTSC Disc Output” (➡ page 46), the picture may be clearer.

Note
The bottom part of the picture may be cut off if the Video CD played does not comply with standards.

Glossary

Track
This is the smallest division on Video CDs and CDs, and usually equates to a single song.

Chapter
This is the smallest division on DVDs and is roughly equivalent to a track.

Title
This is the largest division on DVDs.

Playback control (PBC)
This method of controlling disc play is included on version 2.0 Video CDs. You are able to interact with the disc through menus.

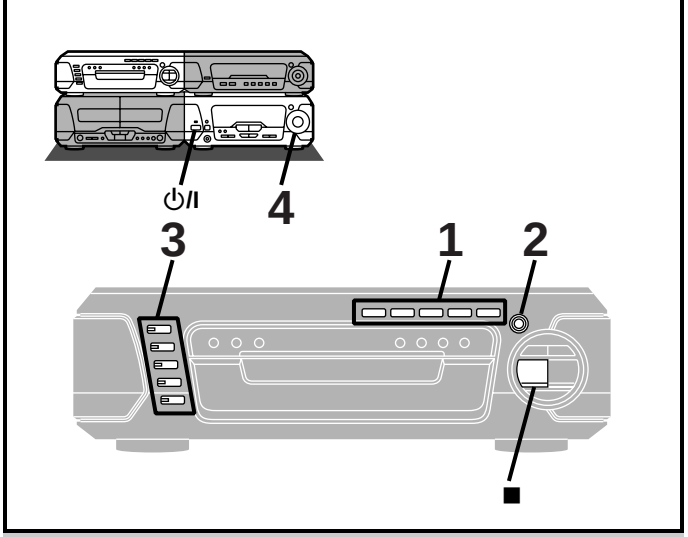

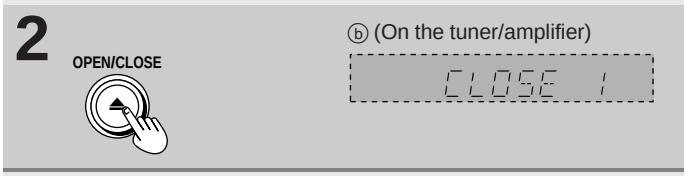

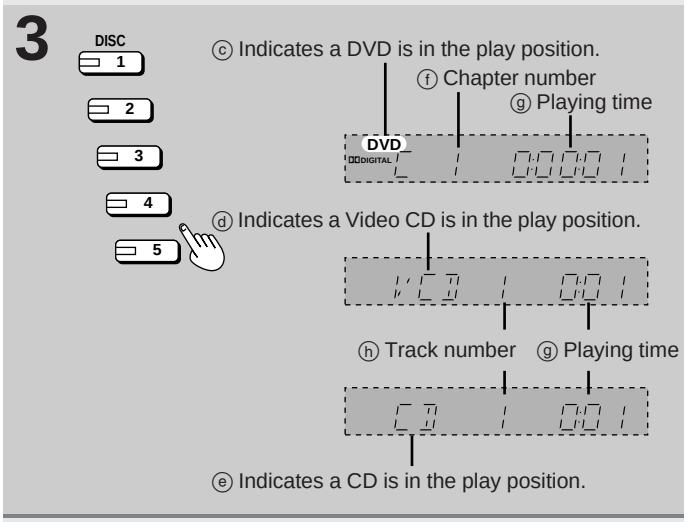

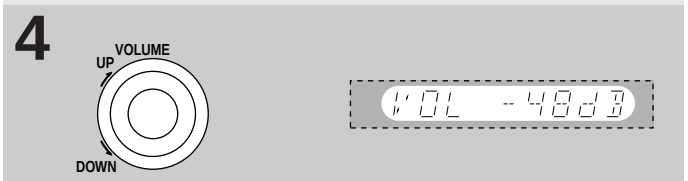

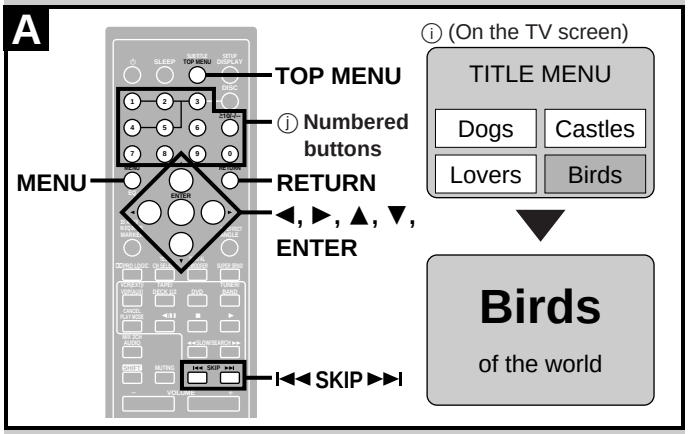

Discs

Screens illustrated are examples.

Normal play

DVD V-CD CD

Preparation:
- Press [⏻/I] to turn the unit on.
- If you are going to play a DVD or Video CD, turn on the television and switch the video input mode of the television to suit the type of connection you have made (e.g., VIDEO 1).

1 Press [DIRECT OPEN] ([DISC 1]–[DISC 5]) to open a tray and set a disc.

2 Press [▲ OPEN/CLOSE] to close the tray.

The tray closed is in the play position (its disc indicator turns green).
Some discs start playing automatically.
Load other trays by repeating steps 1 and 2.

3 Press [DISC 1]–[DISC 5] to change the play position tray and start play.

A If a menu screen appears on the television

Remote control only

Use [◄, ►,▲,▼] to highlight a title/chapter/track and press [ENTER].

You can also select the desired item by pressing the numbered buttons with some discs.

To select title No.10 or over, press [**≥10**] then the two digits.

e.g. Title No. 12: [**≥10**] →[1] →[2]

- The cursor buttons are not effective for selecting items for Video CDs.

4 Adjust the volume.

To stop the disc

Press [■]. (The resume function is activated. ➡ page 15)

A Using menus

To return to a menu during play	DVD: [MENU] or [TOP MENU] Video CD: [RETURN]
To show the next or previous menu	[SKIP ►►I] (next menu) [I◄◄ SKIP] (previous menu)

"⃠" on the TV screen means:

The operation is prohibited by the unit or the disc.

The following messages on the tuner/amplifier mean:

- **"NO DISC"**: There is no disc on the selected tray or the disc is set incorrectly.
- **"NO PLAY"**: The disc does not correspond to the system and cannot be played.
- **"96kHz 24bit"**: The disc is one with high quality sound recorded with a sampling frequency of 96 kHz and 24 bits.

Note

The disc continues to rotate while the menu is displayed even after a particular item has finished. When no more items are to be selected, be sure to press [■] to clear the menu display.

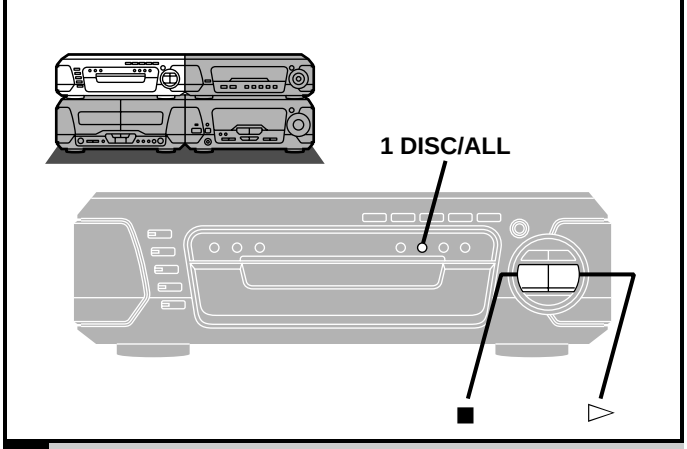

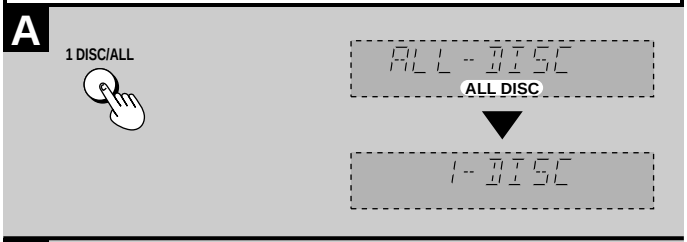

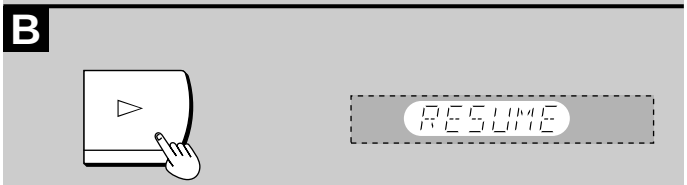

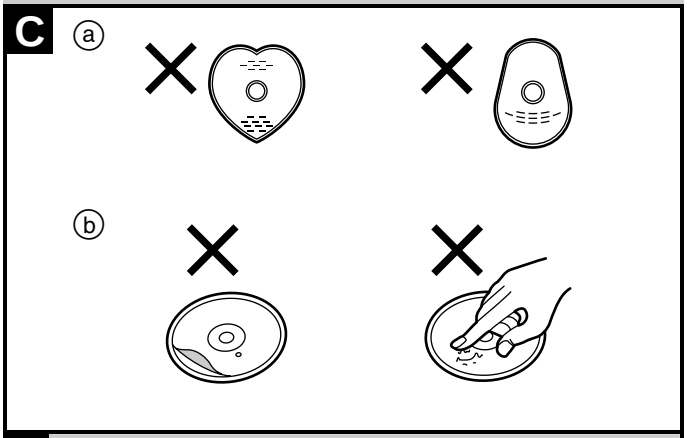

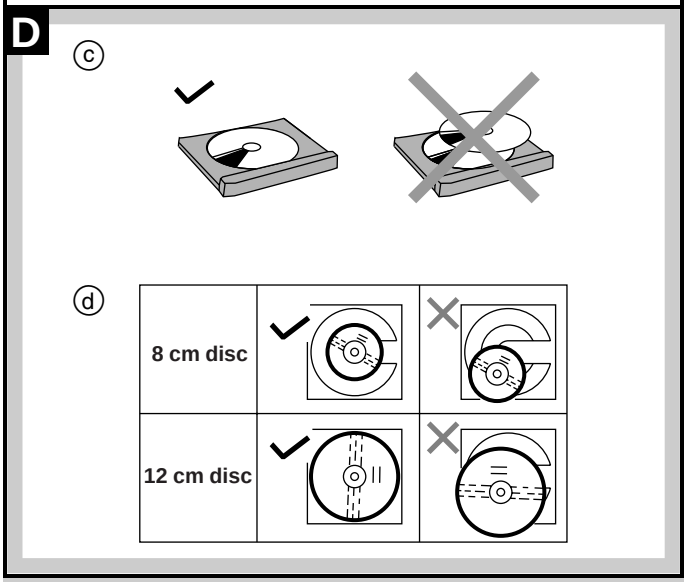

A Selecting ALL-DISC/1-DISC

V-CD CD

You can play up to 5 discs in succession to the “final disc”. ALL-DISC skips trays that are empty or contain DVDs. If the disc is a Video CD with PBC, menu play is automatically canceled.

Preparation:
Ensure a Video CD or CD is in the play position tray.
(You cannot switch between ALL DISC and 1-DISC if the play position tray contains a DVD or is empty.)

Before play

Press [1 DISC/ALL] to select the desired method while stopped.

Each time you press the button:
ALL-DISC: To play all discs in succession
1-DISC: To play 1 disc only

What is meant by “final disc”?
For example, if play starts from disc 4, disc 3 will be the “final disc”.
Order of progression: Disc 4→5→1→2→3

B Resume function

DVD V-CD CD

If you press [■] during play, the unit remembers the position.
This function does not work if the disc’s play time is not displayed on the tuner/amplifier.

To restart play from the point (Only when “RESUME” is lit)
Press [▷].
Play resumes from the point it was stopped.
With DVD
“Press PLAY to Chapter Review” appears on the TV screen for a few seconds. If you press [▷] while the message is on the screen, the beginning portions of each chapter up to the current one are played. Full play resumes from the point where you stopped play.

To cancel the resume function
Press [■] when “RESUME” is lit.

Note
- Resume is canceled if the disc tray is opened or if you change discs.
- The position is saved even if the unit is turned off or a source other than “DVD” is selected.
- Chapter review is not possible with some DVDs.

C Disc selection

Do not;
- use irregularly shaped discs (ⓐ).
- attach extra labels and stickers.
- use discs with labels and stickers that are coming off or with adhesive exuding from under labels and stickers (ⓑ).
- attach scratch-proof covers or any other kind of accessory.
- write anything on the disc.
- clean discs with liquids. (Wipe with a soft, dry cloth.)
- use discs printed with label printers available on the market.

D To prevent damage

Always observe the following points.
- Load only 1 disc per tray (ⓒ).
- Load discs as shown in figure (ⓓ).
  An adaptor is not needed with 8 cm discs (singles).
- Set the system on a flat, level surface.
- Always unload all discs before moving the system.

Do not;
- set the system on top of magazines, inclined surfaces, etc.
- move the system while a tray is opening/closing, or when loaded.
- put anything except discs in trays.
- use cleaning discs or discs which are badly warped or cracked.

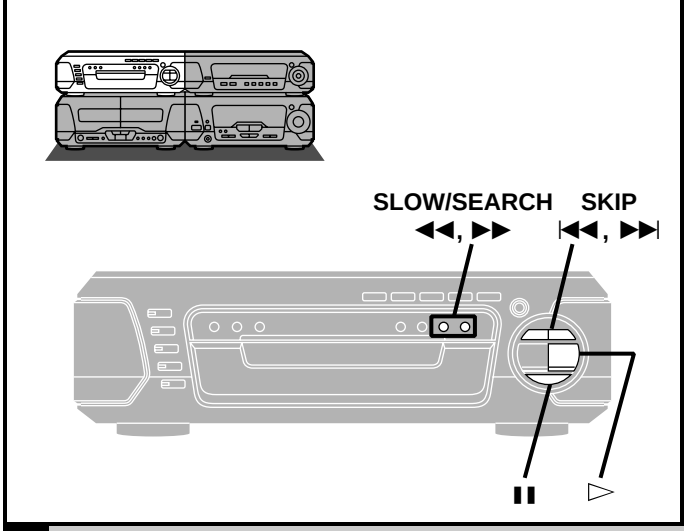

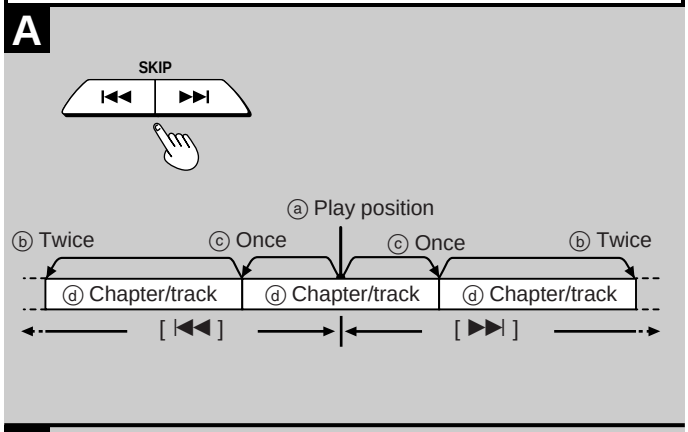

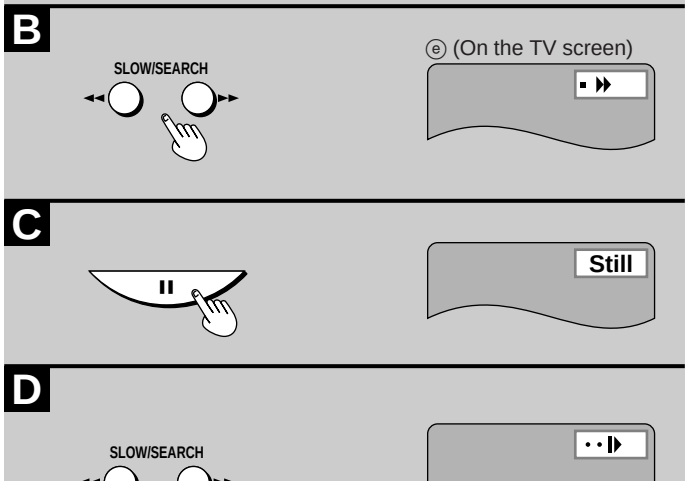

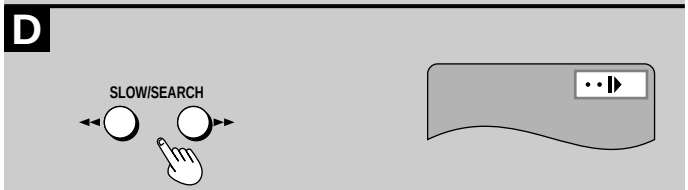

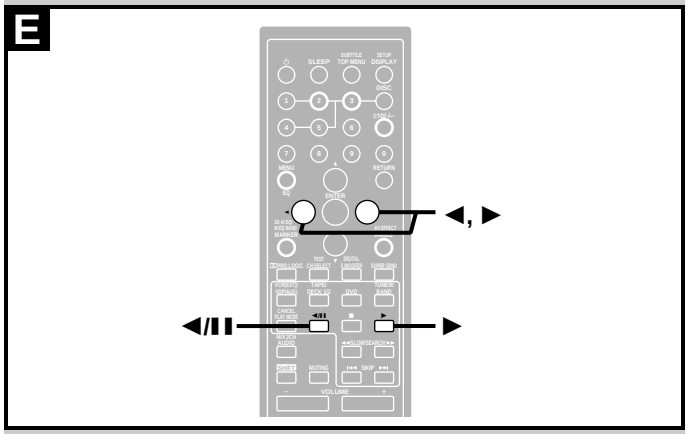

Discs

A Skip function

DVD V-CD CD

You can skip chapters on DVDs and tracks on Video CDs and CDs.

Press [SKIP (|◀◀ or ▶▶|)] during play.

|◀◀: Backward ▶▶|: Forward

Each press increases the number of skips.

Note

If pressed while playing a Video CD with PBC, you may return to a menu screen.

B Search function

DVD V-CD CD

Press [SLOW/SEARCH (◀◀ or ▶▶)] during play.

◀◀: Backward ▶▶: Forward

- Each press increases the speed of the search. There are 5 speeds.
- Press [▷] to resume play.

For your reference:

- Sound will be heard at speed one when searching forward during DVD and Video CD play. You can turn this sound off (➡ "9 Other Settings"–"2 Audio during Search", page 46).
  Audio is heard at any speed when playing CDs, regardless of any settings at "2 Audio during Search".
- If pressed while playing a Video CD with PBC, you may return to a menu screen.

C Still picture (Pause)

DVD V-CD CD

Press [❚❚] during play.

- Press [▷] to resume play.

D Slow-motion play

DVD V-CD

While play is paused

Press [SLOW/SEARCH (◀◀ or ▶▶)].

◀◀: Backward (DVD only)
▶▶: Forward (DVD/Video CD)

- Each press increases the speed of the slow-motion. There are 5 speeds.
- Press [▷] to resume play.

E Frame-by-frame viewing

DVD V-CD

Remote control only

While play is paused

Press the cursor button [◀] or [▶].

◀: Backward (DVD only)
▶: Forward (DVD/Video CD)

- Press [▶] to resume play.

- Each press changes the frame.
- The frames change in succession if you press and hold a cursor button.
- The frame also advances each time you press [◀/❚❚] on the remote control or [❚❚] on the changer.

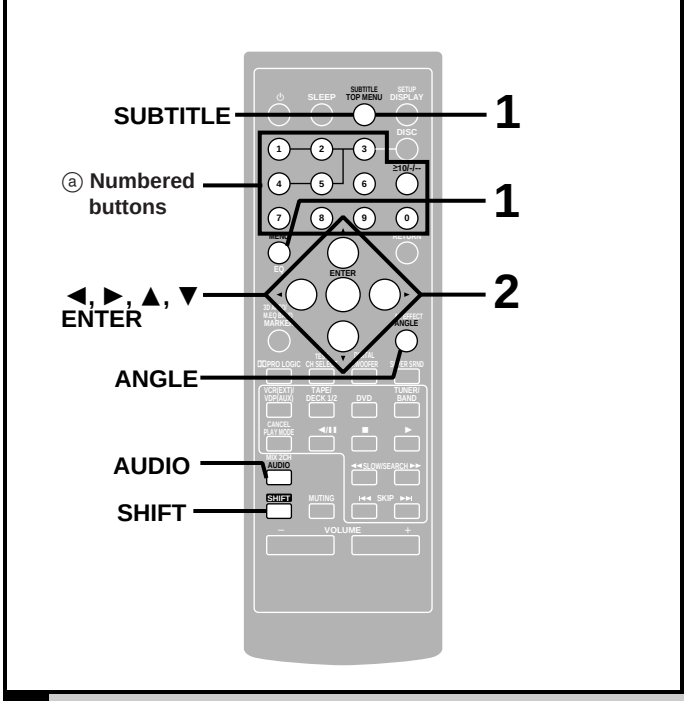

DVD

Remote control only

A Changing soundtrack, subtitle languages and angles

Some DVDs have multiple soundtracks, subtitle languages and camera angles. You can change these during play.

"ANGLE" lights up on the tuner/amplifier during scenes recorded with multiple angles.

Press the appropriate button(s) during play.

[AUDIO]: To change the soundtrack
[SHIFT] + **[SUBTITLE]**: To change the subtitle language
[ANGLE]: To change the angle (only while "ANGLE" is lit)

Each time you press the button(s), the item changes.

- The item can also be changed with [▲] or [▼], or the numbered buttons.
- See the bottom of page 23 for the language abbreviation key.

To turn the subtitles on/off

Press the cursor button [◄] or [►] after pressing [SHIFT] + [SUBTITLE].

To clear the display

Press [ENTER].

For your reference:

- Soundtrack and subtitle languages can be set before play with the initial settings (➡ "1 Disc Languages", page 46).
- While playing Karaoke DVDs, you can also change the karaoke mode as follows by pressing [AUDIO].
  Solo: --- (off) or ON
  Duet: --- (off), 1+2, V1 or V2

Note

You can change the items only if they are available on the disc.

B Using menus to play

By calling up menus during play, you can start play from a specific title or chapter.

Menu content depends on the disc. These operating instructions describe the basic steps.

1 Press [TOP MENU] or [MENU].

A menu screen is displayed.

Press again to return to what you were watching with some discs.

2 Select an item with [◄, ►, ▲, ▼] and press [ENTER] to confirm the selection.

You can select items with the numbered buttons with some discs.

Repeat if another menu is shown.

C DVDs can have several menus. The menu displayed by pressing [TOP MENU] may be different from the menu displayed by pressing [MENU].

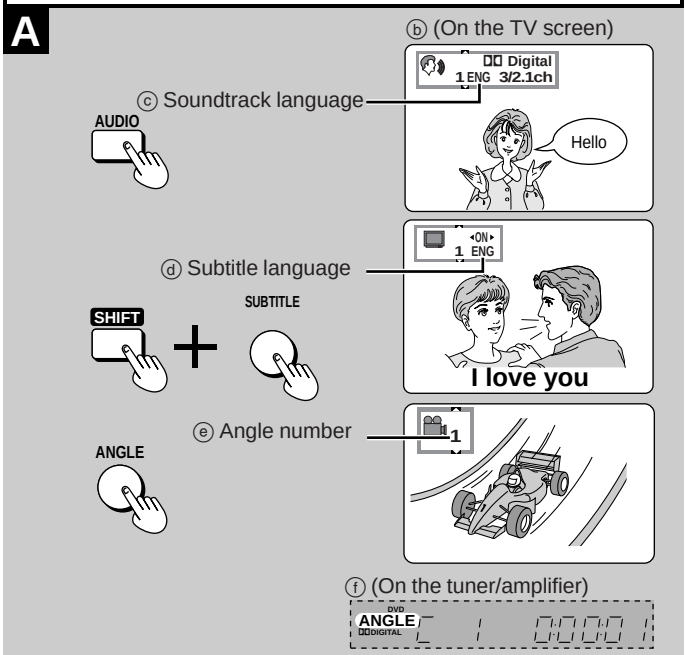

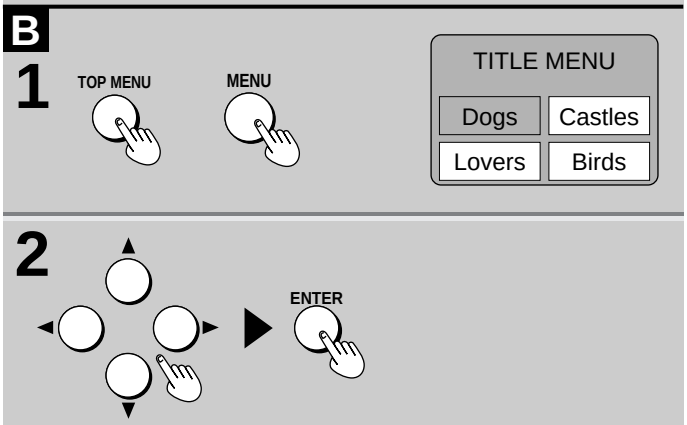

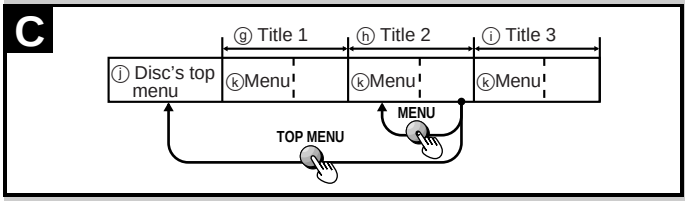

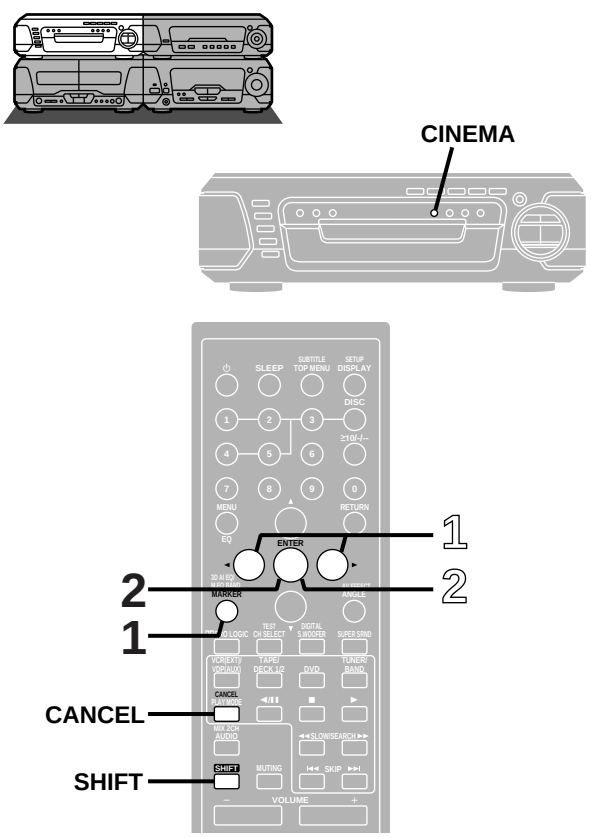

A Changing the picture quality for movie viewing

DVD V-CD

You can enjoy better pictures by changing the picture quality.

Press [CINEMA].

The CINEMA display appears on the TV screen.
Each time you press the button:
C (CINEMA is on)⇄N (CINEMA is off)

To cancel
Press [CINEMA] to display “N”.

B Marking a position

DVD V-CD CD

Remote control only

This feature allows you to mark up to 5 points on a disc so you can return to them easily at a later time.

Marking a position

1 Press [MARKER] during play.

The marker display appears on the TV screen.

2 Press [ENTER] at the point you want to mark.

To mark another position
While the marker display is on the screen, press the cursor button [◄] or [►] to select another “∗” and press [ENTER].

Recalling a marked position

1 **While the marker display is on the screen**

Press the cursor button [◄] or [►] to highlight the required marker.

2 Press [ENTER] to recall the position.

To clear a marker
While the marker display is on the screen
Press the cursor button [◄] or [►] to highlight the marker you want to clear and press [SHIFT] + [CANCEL].

To clear the marker display
Press [MARKER].

Note
- This feature cannot be used if the play time for the disc is not displayed on the tuner/amplifier.
- Some subtitles may not appear around the marker (DVD).
- Markers clear in the following situations:
  - The unit is turned off.
  - The disc is changed or removed.
  - A source other than “DVD” is selected.

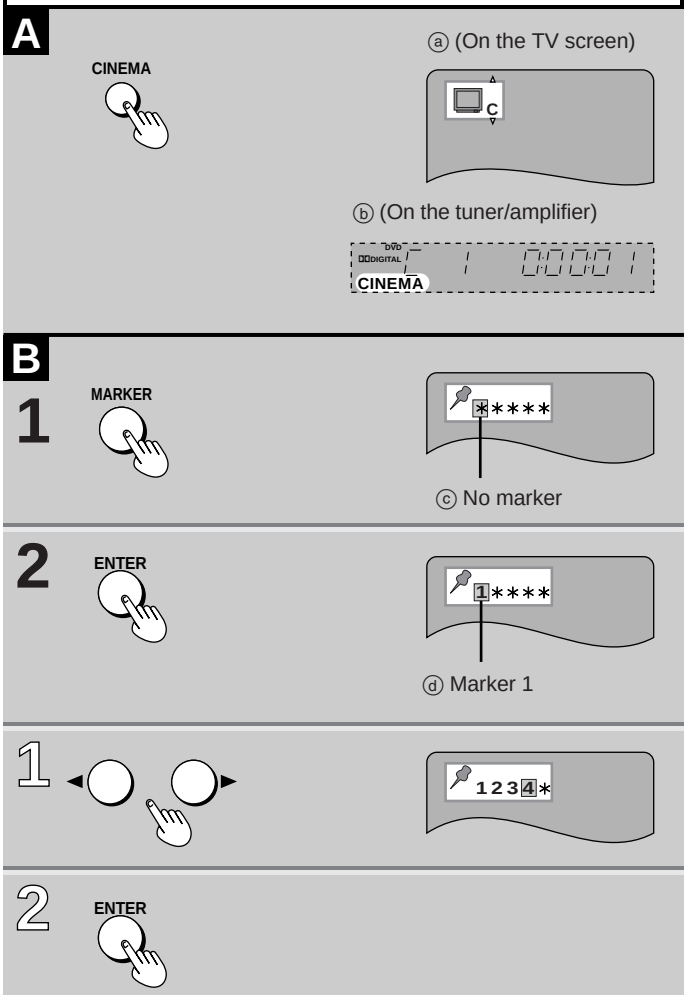

Repeat function

DVD V-CD CD

A Repeating chapters, titles and tracks

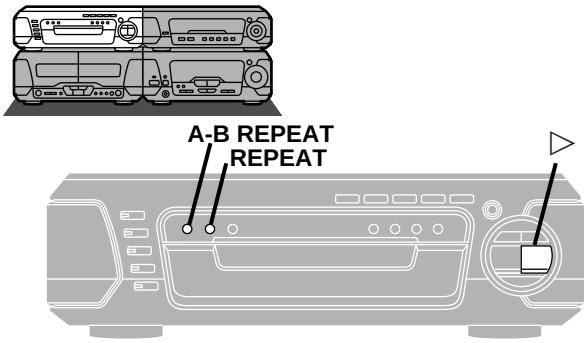

Press [REPEAT] during play.

Each time you press the button:

DVD

ⓑ ↻ C: Current chapter is repeated.
ⓒ ↻ T: Current title is repeated.
ⓓ ↻ OFF: Repeat mode is canceled.

Video CD, CD

ⓕ " ↻ " is displayed: All tracks on the disc(s) are repeated.
ⓖ " ↻ " is cleared: Repeat mode is canceled.

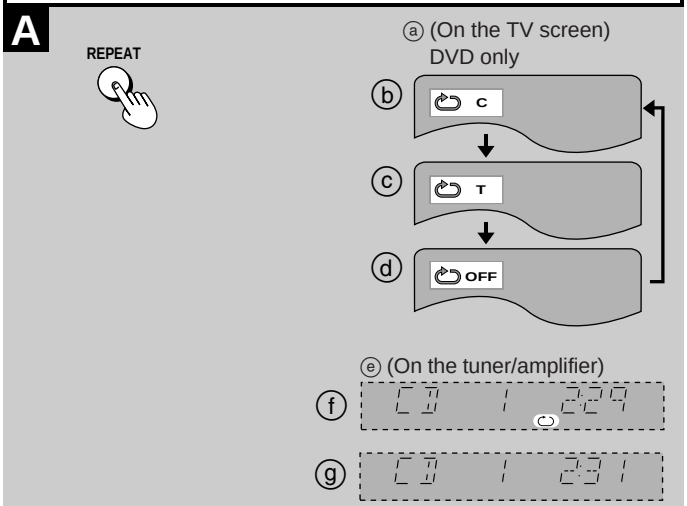

For your reference:

Use the 1 DISC/ALL function if you want to listen to all discs (Video CD/CD) repeatedly (➡ page 15).

To cancel repeat play

Press [REPEAT] to clear " ↻ " on the tuner/amplifier.

Note

Repeat play does not work if the play time for the disc is not displayed on the tuner/amplifier.

To repeat only your favorite tracks (Video CD/CD only)

① Program the tracks you want (➡ page 20).
② Press [▷] . Play will start.
③ Press [REPEAT] to display " ↻ ".

B Repeating a specific section (A-B REPEAT)

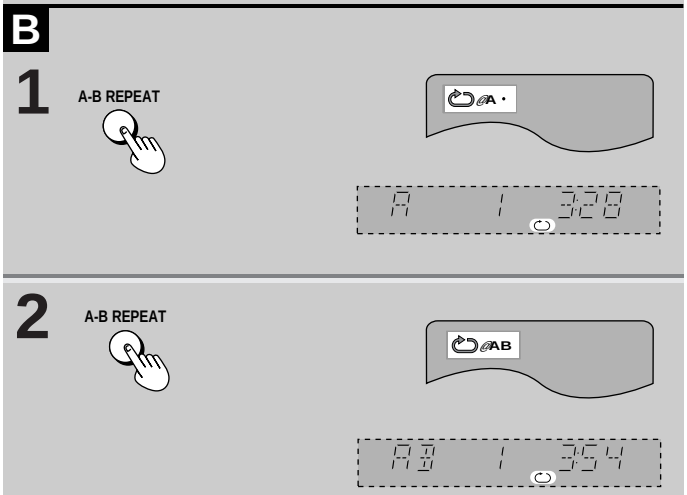

1 Press [A-B REPEAT] during play at the starting point (A).

2 Press [A-B REPEAT] at the finishing point (B).

To cancel A-B repeat play

Press [A-B REPEAT] to clear " ↻ " on the tuner/amplifier.

Note

- This feature cannot be used if the play time for the DVD is not displayed on the tuner/amplifier.
- The end of a track or title is automatically determined as point B when the end of the title/track is reached.
- Subtitles may not appear arround A and B.

Program play

V-CD CD

Remote control only

You can select up to 24 tracks on any of the loaded Video CDs or CDs to play in the order you choose.

Preparation:

- Press [DVD] to select “DVD” as the source.
- Ensure a Video CD or CD is in the play position tray. (Program play is not possible if the play position tray contains a DVD or is empty.)

1 **While stopped**

Press [PLAY MODE] to select “PRGM” on the tuner/amplifier.

Each time you press the button: **PRGM**→RANDOM→(off)

2 **Press [DISC] and (within 10 seconds) [1]–[5] to select the disc.**

3 **Select the track with the numbered buttons.**

For tracks numbered 10 and over, press [**≥10**] then the two digits.

Repeat steps 2 and 3 to program the tracks in the required order.

4 **Press [►].**

All the tracks are played in the selected order.

To exit program mode

Press [PLAY MODE] while in the stop mode to clear “PRGM” on the tuner/amplifier.

Program contents will be saved in the memory.

You can do the following while the disc is stopped in program mode

- **Checking program contents**
  Each time you press [I◄◄ SKIP] or [SKIP ►►I], the disc number, track number and program position are displayed.
- **Adding to the program**
  Repeat steps 2 and 3.
- **Canceling a particular track**
  Select the track with [I◄◄ SKIP] or [SKIP ►►I] then press [SHIFT] + [CANCEL].
- **Canceling all tracks**
  Hold [■] for 3 seconds.

If “FULL” is displayed

24 tracks have been programmed. No further tracks can be programmed.

Note

- Discs and tracks the unit cannot find can be programmed but are skipped during play. This is also the case if you program a DVD.
- You can program individual tracks even if the disc is a Video CD with PBC.
- Skipping is done in the programmed order.
- You can search only within a track being played in program order.
- You cannot start play by pressing [DISC 1]–[DISC 5] on the main unit while in the program mode.

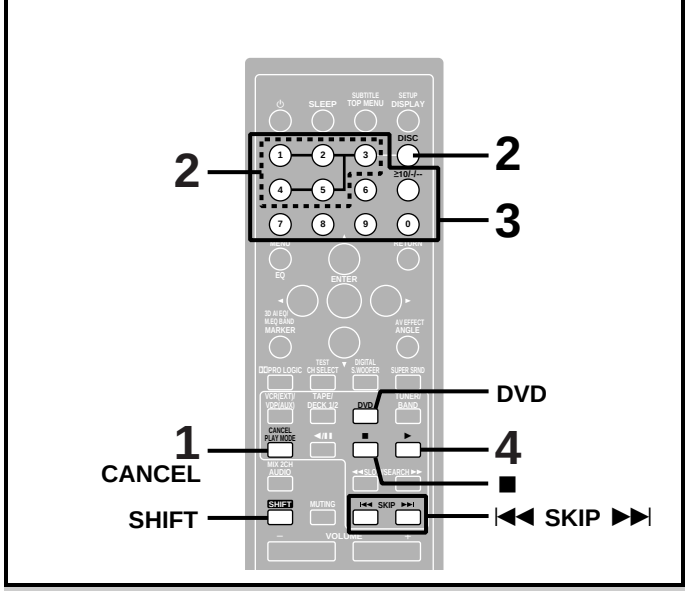

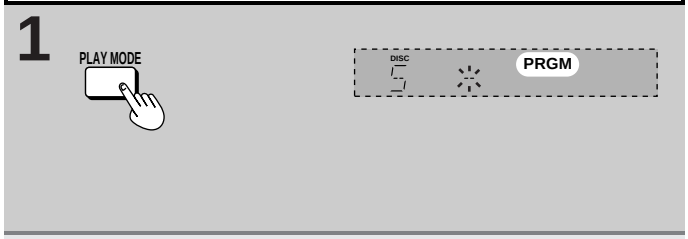

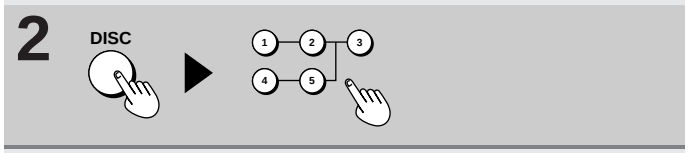

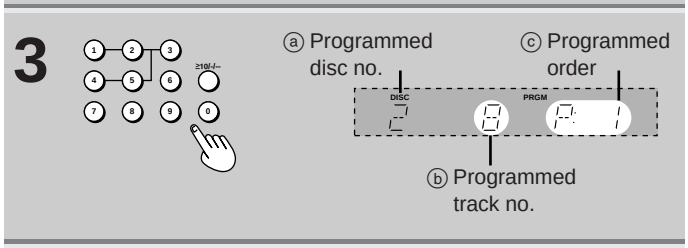

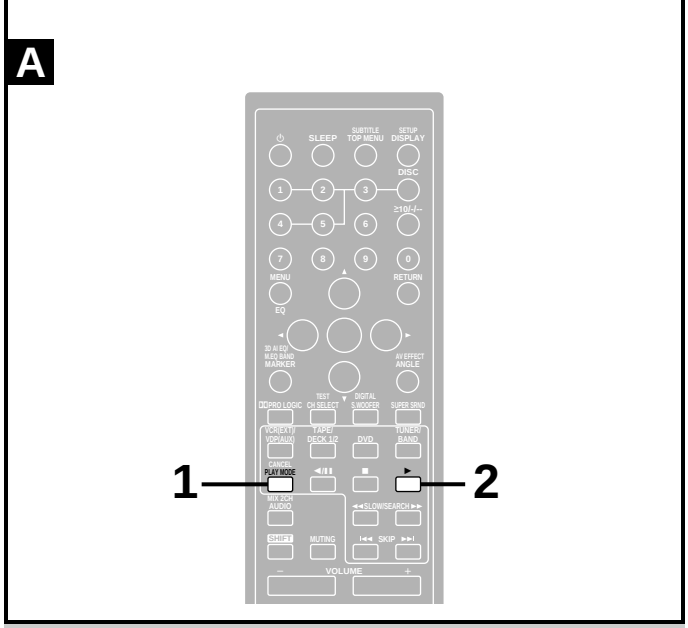

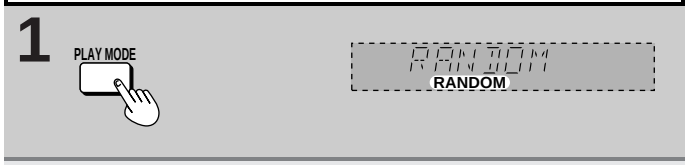

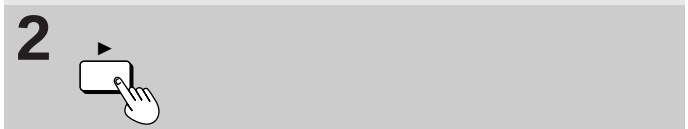

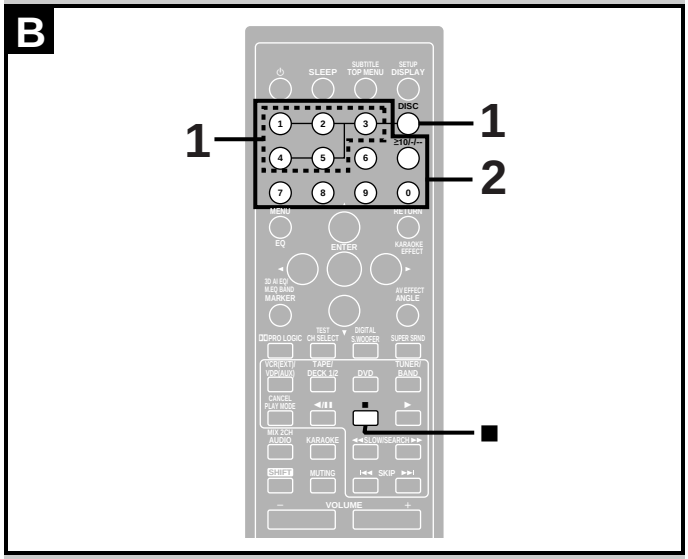

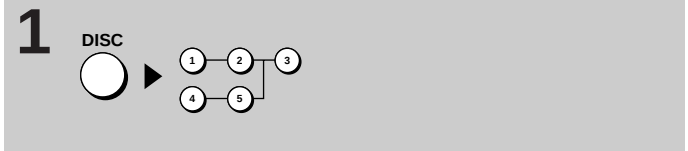

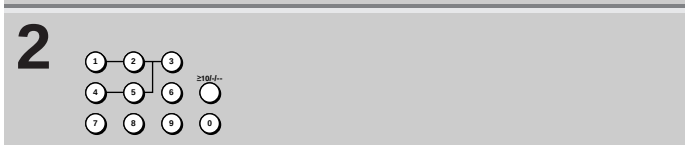

V-CD CD

Remote control only

Preparation:
Press [DVD] to select “DVD” as the source.

A Random play

Plays all discs once each in random order.
Ensure a Video CD or CD is in the play position tray. (Random play is not possible if the play position tray contains a DVD or is empty.)

1 While stopped
Press [PLAY MODE] to select “RANDOM” on the tuner/amplifier.
Each time you press the button: PRGM→**RANDOM**→(off)

2 Press [►] .
All tracks on all discs are played in random order.

To exit random mode
Press [PLAY MODE] while in the stop mode to clear “RANDOM” on the tuner/amplifier.

Note
- If the disc is a Video CD with PBC, menu play is automatically canceled during random play.
- This function skips DVDs.
- You cannot skip tracks already played.
- You can search only within a track being played in random play.
- You cannot start play by pressing [DISC 1]–[DISC 5] on the main unit while in the random mode.

B Starting play from a specific track

1 Press [DISC] and (within 10 seconds) [1]–[5] to select the disc.
Play starts from the first track.
- If a menu appears (Video CD with PBC), press [■] to cancel menu play.

2 Select the track with the numbered buttons.
For tracks numbered 10 or over, press [**≥10**] then the two digits.
Play starts from the selected track.

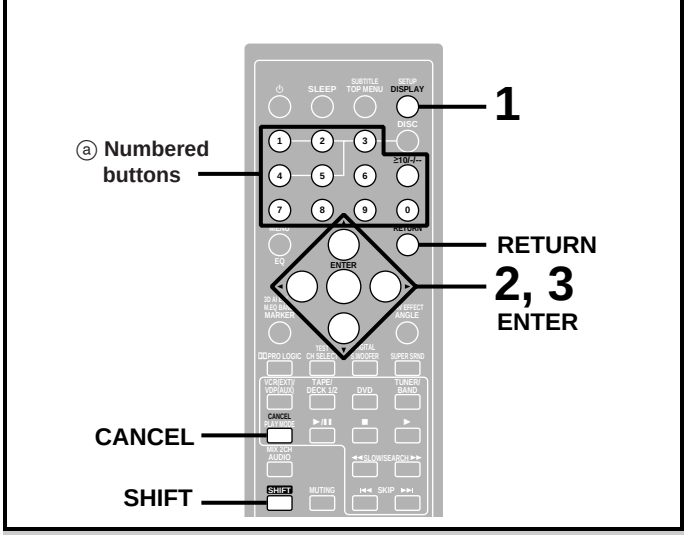

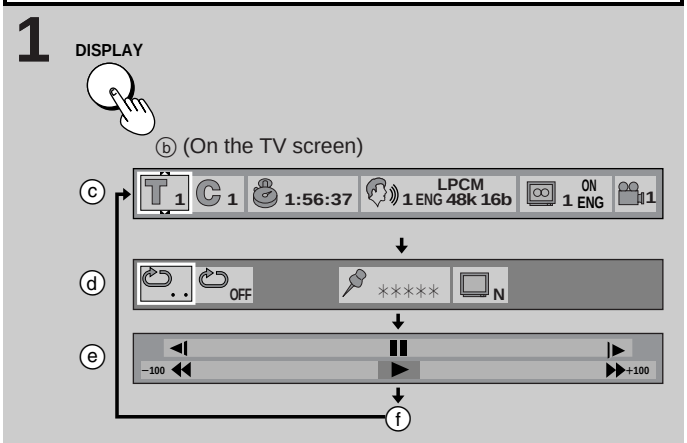

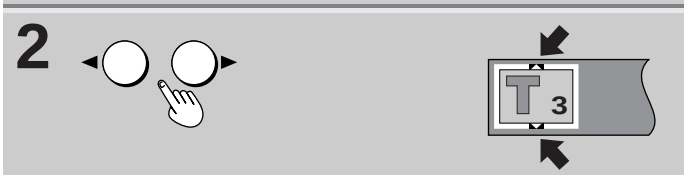

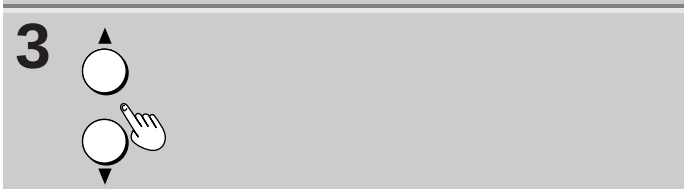

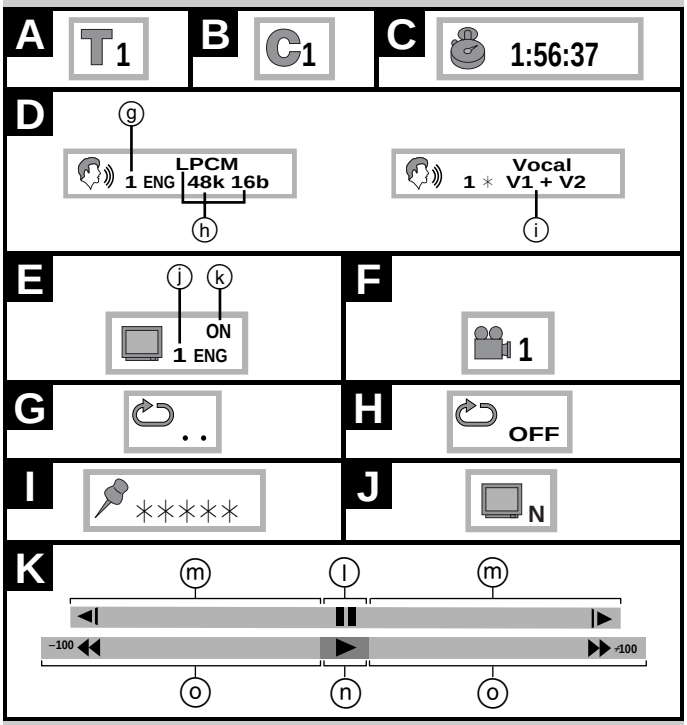

Using GUI screens

DVD

GUI (Graphic User Interface) are icons which appear on the TV screen to allow you to interact with the unit. GUI screens show information about the unit and discs. You can perform various operations by changing the information shown in these screens.

Note

GUI screens will not be displayed if the play position tray contains a Video CD or CD.

1 Press [DISPLAY].

The GUI screen appears.
Each time you press the button:
Disc GUI (ⓒ)→Unit GUI (ⓓ)→Shuttle GUI (ⓔ)
↑——— Original display (ⓕ)———┘

Disc GUI (ⓒ):
You can change the title or chapter, or change the position by specifying the time. You can also change soundtracks, subtitles and angles.
Unit GUI (ⓓ):
You can start repeat play, mark a position and recall it, or turn on/off the cinema mode.
Shuttle GUI (ⓔ):
You can fast-forward, backward or start slow-motion play.
Original display (ⓕ):
GUI is not displayed.

2 Press the cursor button [◀] or [▶] to select an item.

Settings can only be changed if "△" or "▽" appears at the top or bottom of the icon.

3 Press [▲] or [▼] to change the setting.

Some items can also be changed with the numbered buttons. Press [ENTER] to confirm the setting after entering it with the numbered buttons.

To clear the GUI screen

Press [DISPLAY] until the original display is restored or press [RETURN].

For your reference:

- The contents of each screen depend on the kind of disc you are playing.
- Some items require different operations to change the contents, so refer to the GUI icon descriptions (➡ page 23) for details.
- The GUI screens disappear after performing some operations, such as changing the title or chapter.
- If the GUI screen is partially cut off or fails to appear, change the position with the initial settings, "4 On-Screen Messages"–"2 Colour and Position" (➡ page 46).

Note

Some discs will not allow some of these operations.

Disc GUI descriptions

Content	Operation (➡ page 22 for details)
A Title number	[▲], [▼] or numbered buttons ⬇ [ENTER]
B Chapter number	[▲], [▼] or numbered buttons ⬇ [ENTER]
C Time (select a position to start play by specifying a time)	Numbered buttons ⬇ [ENTER]
D ⓖ Soundtrack language (See below for language abbreviations.)	[▲], [▼] or numbered buttons
D ⓗ Audio attribute LPCM/DD Digital/DTS/MPEG: Type of audio signal 48k/96k (LPCM): Sampling frequency (k=kHz) 16b/20b/24b (LPCM): Number of bits -- ch (DD Digital/DTS/MPEG): Number of channels (※1 See below for details.)	—
D ⓘ Switching vocals on Karaoke discs Solo : --- (off) or ON Duet: --- (off), V1+V2, V1 or V2	Karaoke DVD only [▲] or [▼]
E ⓙ Subtitle language (See below for language abbreviations.)	[▲], [▼] or numbered buttons
E ⓚ Subtitles on or off	[▲] or [▼]
F Angle number	[▲], [▼] or numbered buttons

Unit GUI descriptions

Content	Operation
G A-B repeat (start and finish points for A-B repeat)	[ENTER] (at the start point) ⬇ [ENTER] (at the finish point) ●To cancel A-B repeat: [ENTER]
H Repeat play (select a repeat play mode) C (chapter), T (title), OFF	[▲] or [▼]
I Mark a position	[ENTER] (to highlight the first marker) ⬇ [ENTER] (at the desired point)
I Recall a mark	[◀] or [▶] (to select the mark) ⬇ [ENTER] (to recall the position)
I Erase a mark	[◀] or [▶] (to select the mark) ⬇ [SHIFT] + [CANCEL]
J Cinema mode C (on), N (off)	[▲] or [▼]

K Shuttle GUI descriptions

Content	Operation
ⓛ Pause	[▲]
ⓜ Slow-motion play ◀I: Backward I▶: Forward You can select 5 levels of speed in either direction.	[▲] (to pause) ⬇ [◀] or [▶]
ⓝ Play	[▼]
ⓞ Search ◀◀: Backward ▶▶: Forward ●You can select 5 levels of speed in either direction. ●The numbers on either sides of the shuttle screen indicate the maximum speeds.	[▼] ⬇ [◀] or [▶]

Note

Actual information displayed depends on the disc.

Language abbreviations

ENG:	English	SVE:	Swedish	CHI:	Chinese
FRA:	French	NOR:	Norwegian	KOR:	Korean
DEU:	German	DAN:	Danish	MAL:	Malay
ITA:	Italian	POR:	Portuguese	VIE:	Vietnamese
ESP:	Spanish	RUS:	Russian	THA:	Thai
NLD:	Dutch	JPN:	Japanese	✳:	Others

※1 The number of channels recorded on the disc

Example:

3/2 .1ch

- .1: Subwoofer signal (not displayed if there is no subwoofer signal)
- 0: No surround
1: Mono surround
2: Stereo surround (left/right)
- 1: Center
2: Front left+Front right
3: Front left+Front right+Center

The radio: manual tuning

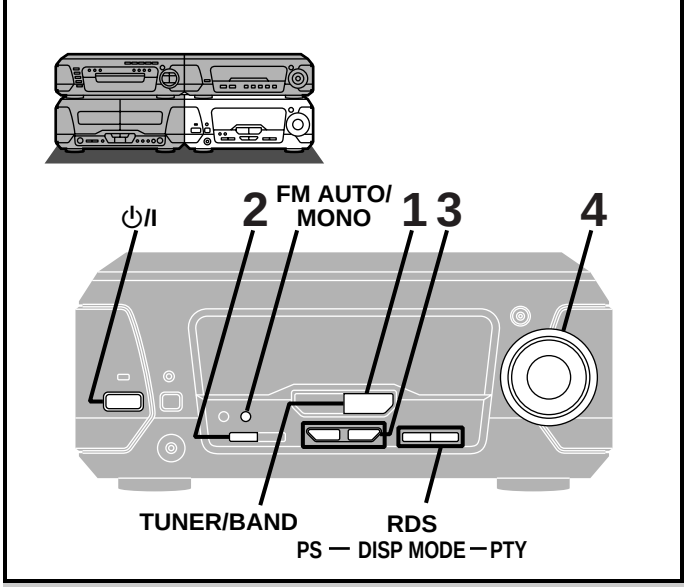

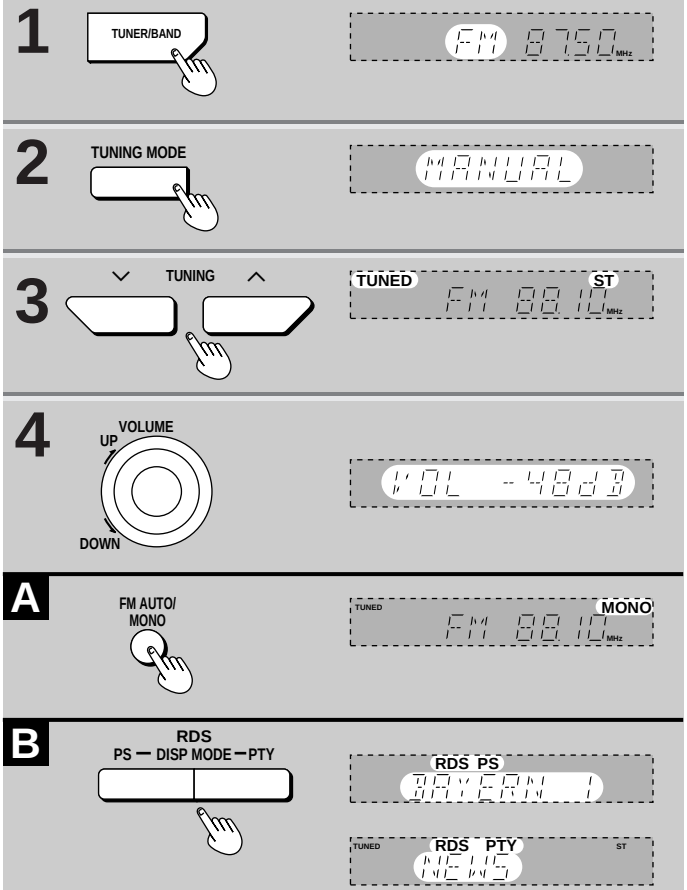

Radio stations can be tuned manually by selecting the station's frequency or they can be preset into channels to make it easy to tune with the tuner/amplifier or the remote control (➡ page 25).

Preparation: Press [⏻/I] to turn the unit on.

1 Press [TUNER/BAND] to select "FM" or "AM".

Each time you press the button: FM⇄AM

2 Press [TUNING MODE] to select "MANUAL".

Each time you press the button: MANUAL⇄PRESET

3 Press [TUNING (∨ or ∧)] to tune in the desired broadcast.

"TUNED" is displayed when a radio station is tuned.
"ST" is displayed when a stereo FM broadcast is being received.

4 Adjust the volume.

Auto tuning

Press and hold [TUNING (∨ or ∧)] for a moment until the frequency starts changing rapidly. The unit begins auto tuning, stopping when it finds a station.

- Auto tuning may not function when there is excessive interference,.
- To cancel auto tuning, press [TUNING (∨ or ∧)] once again.

A If noise is excessive in FM

Press [FM AUTO/MONO] to display "MONO."

This mode improves sound quality if reception is weak, but broadcasts will be heard in monaural.

Press [FM AUTO/MONO] again to cancel the mode. "MONO" goes out. MONO is also canceled if the frequency is changed.

Turn off "MONO" for normal listening. Stereo and monaural broadcasts are automatically played as they are received.

Stations can be preset in monaural manually (➡ page 25).

B RDS broadcasting (Only for the United Kingdom and Continental Europe)

This unit can display the text data transmitted by the radio data system (RDS) available in some areas.

If the station you are listening to is transmitting RDS signals, "RDS" will light up on the display.

Displaying the name of a broadcasting station

Press [PS-DISP MODE] to display the station name.
Press [DISP MODE-PTY] to display the program type.
Each time you press the button:
Frequency display⇄PS or PTY display

If the PS display isn't shown

Press and hold [PS-DISP MODE] for about 4 seconds.
The mode switches every time the button is pressed and held:
MODE 1⇄MODE 2

Note

RDS displays may not be available if reception is poor.

※"M.O.R M"="Middle of the road music"

ⓐ PTY displays			
NEWS	VARIED	FINANCE	COUNTRY
AFFAIRS	POP M	CHILDREN	NATIONAL
INFO	ROCK M	SOCIAL A	OLDIES
SPORT	M.O.R M※	RELIGION	FOLK M
EDUCATE	LIGHT M	PHONE IN	DOCUMENT
DRAMA	CLASSICS	TRAVEL	TEST
CULTURE	OTHER M	LEISURE	ALARM
SCIENCE	WEATHER	JAZZ	

AM allocation settings:

(Except for the United Kingdom, Continental Europe, Russia, Australia and N.Z.)

By adjusting the AM allocation, you can enable the tuner to receive AM broadcasts allocated in 10 kHz steps.

Press and hold [TUNER/BAND].

After a few seconds the display will change to a flashing display of the current minimum AM frequency. If you continue to hold [TUNER/BAND] down, the minimum frequency will change. Release the button at this time.

To return to the original frequency indication, repeat above.

Note

After changing the allocation setting, the frequencies you previously preset in the memory will be cleared.

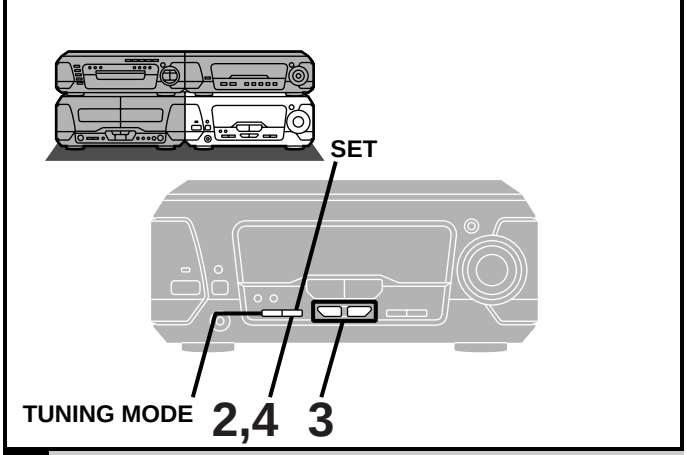

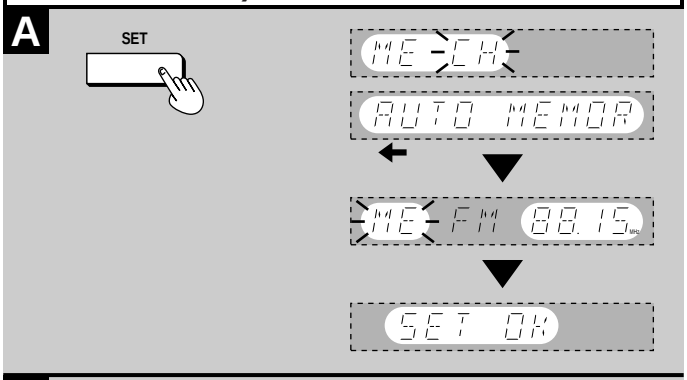

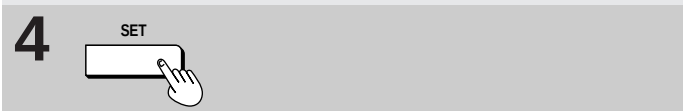

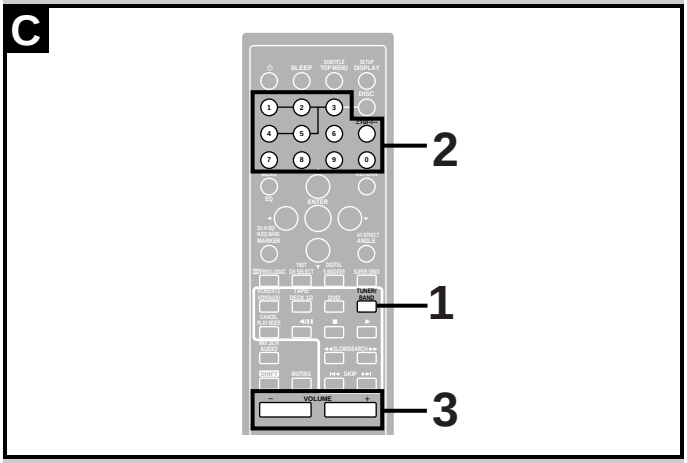

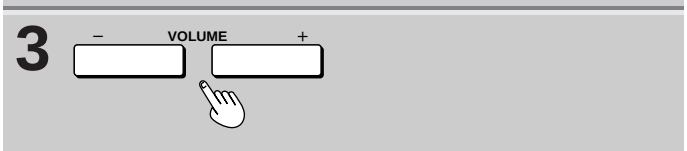

The radio: preset tuning

You can choose either automatic presetting, which presets all the stations the tuner/amplifier can receive, or manual presetting, which allows you to select the stations to preset and the order they are to be preset in.
There are 39 channels available for presetting.

A Automatic presetting

Do the following once each for FM and AM.

Preparation: Tune to the frequency where presetting is to begin (➡ page 24).

Hold down [SET].

Release the button when “AUTO MEMORY” appears.
The tuner presets all the stations it can receive into the channels in ascending order. FM stations are preset into channels 1 to 39, and AM stations are preset into channels 21 to 39.
“SET OK” is shown when presetting is complete and the last station that was preset is played.
“ERROR” is displayed if the tuner doesn’t receive any stations. Try presetting manually if this happens (see below).

Note
AM stations replace any FM channels that were preset in channels 21 to 39.

B Manual presetting

Preset the stations one at a time.

1 **Tune to the required station.**

2 **Press [SET].**

3 **Press [TUNING (∨ or ∧)] to select a channel.**

4 **Press [SET].**

The station occupying a channel is erased if another station is preset in that channel.

C Selecting channels

On the remote control

1 **Press [TUNER/BAND].**

2 **Press the numbered buttons to select the channel.**
For channels 1 to 9 press the corresponding number.
For channels 10 or over press [**≥10**], then the two digits.
e.g. To select channel 21: [**≥10**]→[2]→[1]

3 **Adjust the volume.**

On the main unit
① Select “PRESET” with [TUNING MODE].
② Press [TUNING (∨ or ∧)] to select the channel.

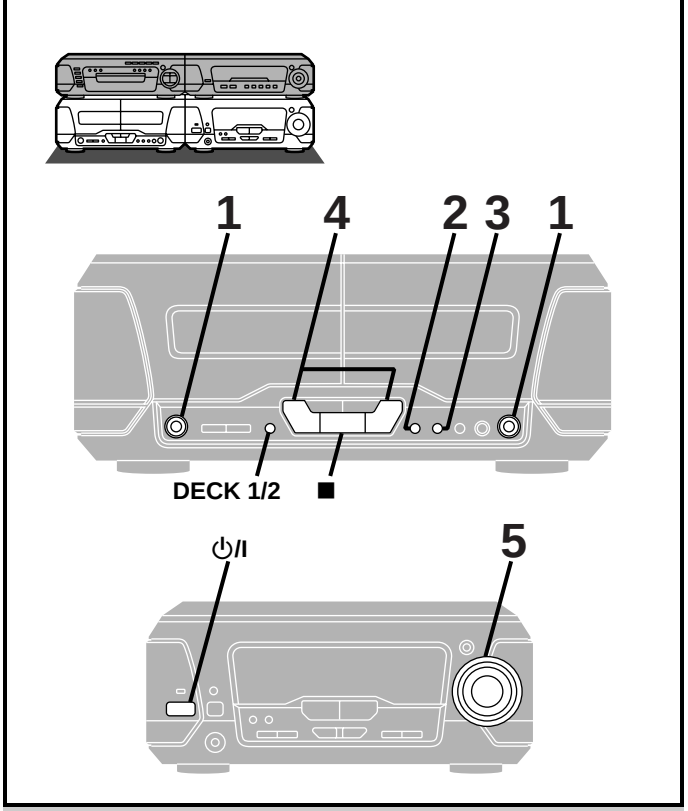

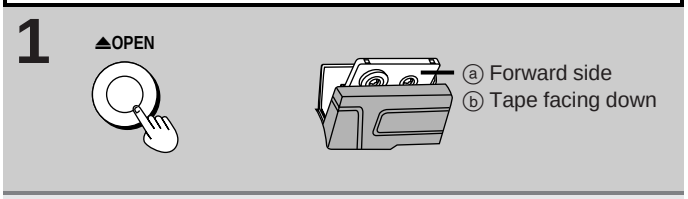

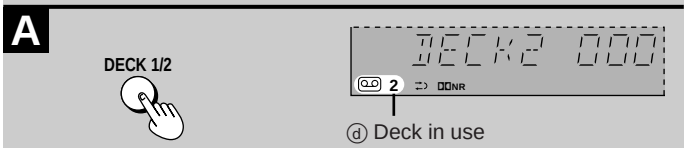

Cassette tapes

Preparation: Press [⏻/I] to turn the unit on.

1 Press [⏏ OPEN] on deck 1 or deck 2 and insert the cassette.

2 Press [DOLBY NR] to select Dolby NR on ("DOLBY NR" appears) **or off.**
(➡ "Dolby noise reduction", page 27)

3 Press [REV MODE] to select the reverse mode.
Each time you press the button:
⇄: One side is played.
⇉: Both sides are played.
↻⇉: Both sides are played 8 times each.

4 Press [◁] (reverse side) or [▷] (forward side).
Play begins and the indicator changes to green.

5 Adjust the volume.

To stop the tape
Press [■].

A To change the deck to be used
Press [DECK 1/2] to select the deck you want to play.

To listen to 2 tapes consecutively
Insert a tape into each deck and select "↻⇉". Both tapes will be played 8 times each.

Cassette tape selection and care

The unit can correctly play the following types. It identifies the type automatically.

Normal position/TYPE I	✔
High position/TYPE II	✔
Metal position/TYPE IV	✔

- Tapes exceeding 100 minutes are thin and can break or get caught in the mechanism.
- Tape slack can get caught up in the mechanism and should be wound up before the tape is played.
- Endless tapes can get caught up in the deck's moving parts if used incorrectly. Use tapes appropriate to this unit's auto-reverse mechanism.

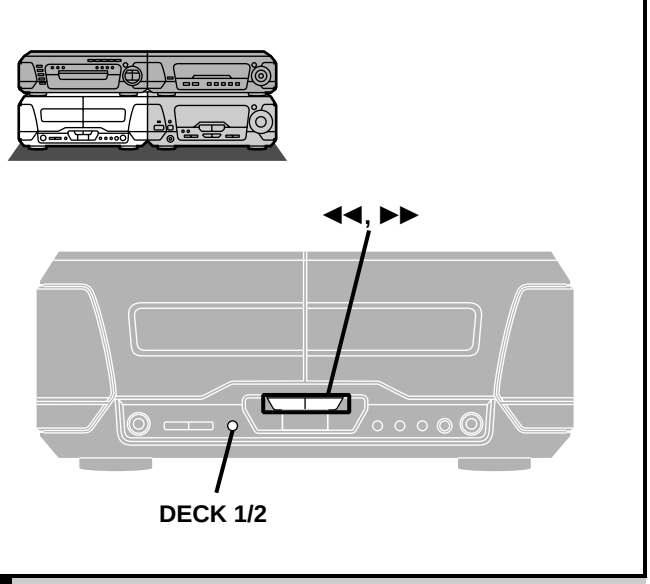

A

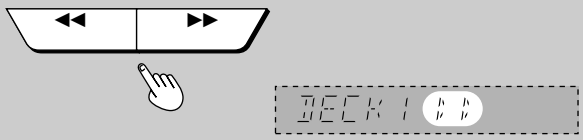

B

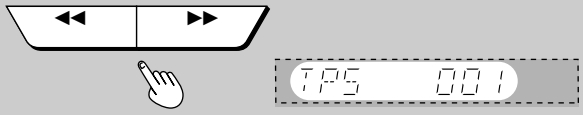

Cassette tapes

A Fast-forwarding and rewinding

Press [◀◀] or [▶▶] while the tape is stopped.

Tape direction	rewind	fast-forward
▷	◀◀	▶▶
◁	▶▶	◀◀

For your reference:

- Each deck's play direction is stored in the system's memory.
- You can fast-forward or rewind the tape while you are playing or recording a tape in the other deck. Press [DECK 1/2] to switch to the non-playing deck, and then press [◀◀] or [▶▶]. After the above operation, be sure to press [DECK 1/2] to select the other deck in which you are playing a tape.

B Tape program sensor (TPS)

TPS finds the beginning of a track and resumes play from there.

Press [◀◀] or [▶▶] during play.

Tape direction	backward	forward
▷	◀◀	▶▶
◁	▶▶	◀◀

Note

TPS may not operate correctly in the following situations:
If the interval between tracks is less than 4 seconds.
If there is noise between tracks.
If there are silent sections within tracks.

Dolby noise reduction

Dolby NR reduces "hissing" when playing tapes. It increases the high frequency region when recording and then reduces it during play. Use the same system during play and recording. This unit has Dolby B NR which reduces noise to a third.
Prerecorded cassettes and equipment marked "DD" use Dolby B NR.

Dolby noise reduction manufactured under license from Dolby Laboratories.
"Dolby" and the double-D symbol are trademarks of Dolby Laboratories.

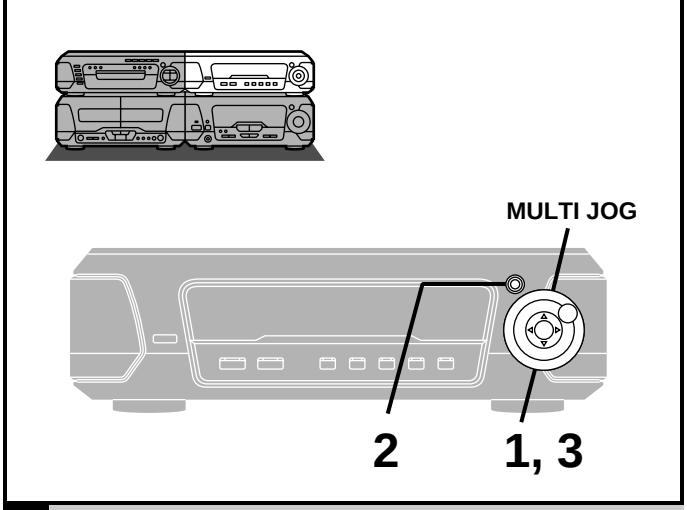

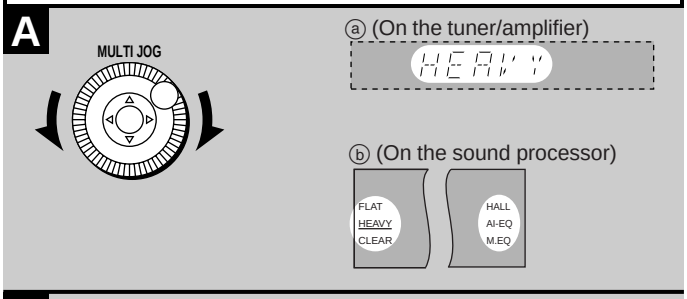

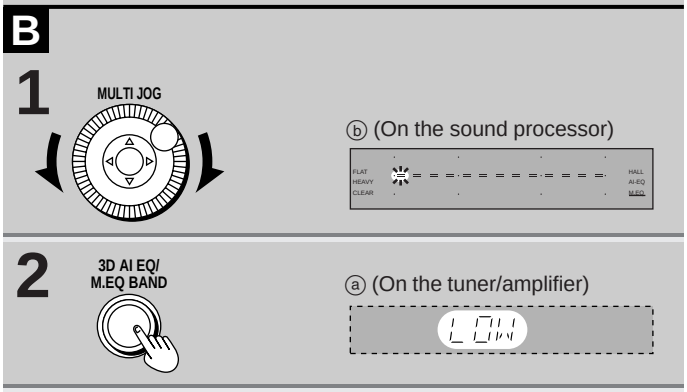

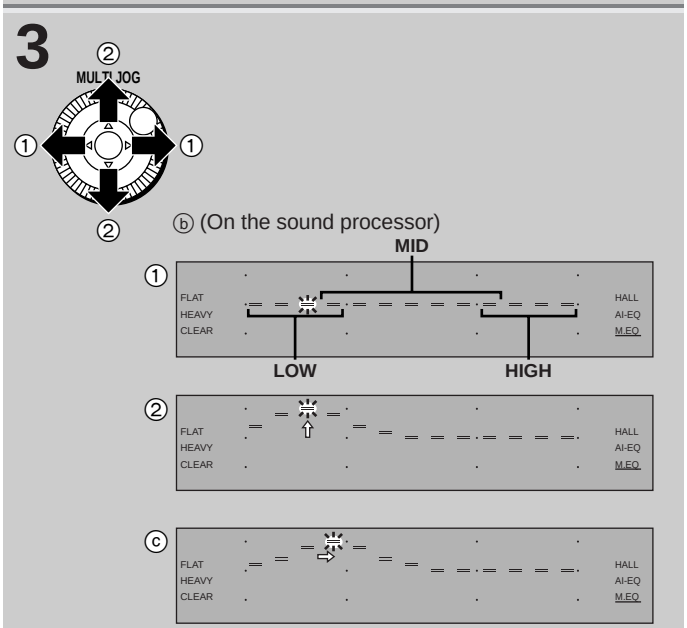

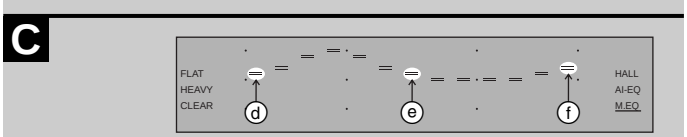

Changing sound field and quality

Changes to sound field and quality have no effect on recordings.

A

Turn [MULTI JOG] to select a setting.

Each time you turn [MULTI JOG]:

HEAVY: Adds power to rock.
CLEAR: Clarifies higher sounds.
HALL: Expands sound.
AI-EQ: Adjust sound with the acoustic image equalizer (➡ page 29).
M.EQ: Create your own effects (➡ see below).
FLAT: Canceled (no effect is added).

On the remote control

Press [SHIFT] + [EQ].

Note

Turn off the effect if sound quality is reduced when using HALL or 3D AI EQ with a source.

B Using the manual equalizer

Create your own sound quality effects.

1 Turn [MULTI JOG] to select “M.EQ”.

2 Press [3D AI EQ/M.EQ BAND] to select the band.

Each time you press the button:

LOW→MID→HIGH

3 Use [◁, ▷, △, ▽] to make the desired curve.

① Select the frequency you want to use as the peak with [◁, ▷].
② Adjust the level of the peak with [△, ▽].

- Adjacent frequencies are adjusted at the same time to maintain a smooth curve.
- When you have adjusted the curve, you can move the peak of the curve by pressing [◁, ▷] (ⓒ).

Repeat steps 2 and 3 to adjust the three bands.

The original display is restored on the display panel in about 5 seconds.

To cancel

Turn [MULTI JOG] to select “FLAT”.

Note

- The changes you make are stored and automatically recalled the next time you select “M.EQ”.
- After making a curve in one band, any adjustments in another band make a curve that is a combination of the two.

C To flatten the curves in all three bands

Set the frequencies ⓓ in LOW, ⓔ in MID, and ⓕ in HIGH to flat.

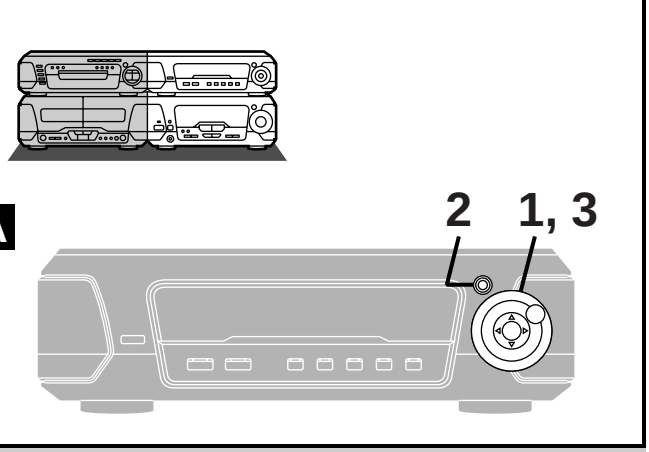

A Using the acoustic image equalizer (3D AI EQ)

Achieve subtle sound quality settings with the soft, sharp, heavy, and light coordinates.
Select one of the two 3D settings for a surround effect.

1 Turn [MULTI JOG] to select “AI-EQ”.

2 Press [3D AI EQ/M.EQ BAND] to select the surround level.

Each time you press the button:
AI EQ→3D AI 1→3D AI 2
↑_____________↓

3 Change the sound quality with [◁, ▷, △, ▽].

① Adjust softness and sharpness with [◁, ▷].
② Adjust heaviness and lightness with [△, ▽].

The original display is restored on the display panel in about 5 seconds.

To cancel
Turn [MULTI JOG] to select “FLAT”.

Note

- The changes you make are stored and automatically recalled the next time you select “AI-EQ”.
- “3D AI 1” and “3D AI 2” cannot be selected while the surround system or Karaoke mode is on (➡ page 30 or 40).

B Boosting the super woofer

Press [DIGITAL S.WOOFER].

The indicator lights.
Each time you press the button:
MID (middle)→MAX (maximum)→cancel
↑_____________↓

There is only one level when listening through headphones.

To cancel
Press [DIGITAL S.WOOFER] to turn the indicator off.

For your reference:
(Except for the United Kingdom, Continental Europe, Australia and N.Z.)
The level of the subwoofer (included) is also boosted with the super woofer.

The following chart gives a summary of this unit's surround features. It also shows additional features that can be used to enhance your listening enjoyment.

Note

- None of the features are effective when headphones are used or when radio is selected as the source.
- You may experience a reduction in sound quality when these surround systems and effects are used with some sources. If this occurs, either turn the surround system or effect off or reduce the level of the effect.

Surround system		Features	Software
DOLBY DIGITAL (➡ page 32)		●Dolby Digital is a discrete 5.1 (6) channel surround system developed for cinema use. The sound signals in Dolby Digital format are compressed to 1/10 their original size, allowing an entire movie to be recorded on a single DVD. ●This unit automatically recognizes DVDs that have been recorded with Dolby Digital. ●Not all Dolby Digital sources are recorded with 5.1 (6) channels. Some sources marked Dolby Digital may be recorded in Dolby Surround, a 2 channel system.	DVDs encoded with Dolby Digital can be identified with this mark. DOLBY DIGITAL
DOLBY PRO LOGIC (➡ page 33)		●Dolby Pro Logic is a decoding system that was developed to get a better sense of presence from sources encoded with Dolby Surround. Positioning has been improved by the addition of a separate center speaker channel. ●This unit has built-in Dolby Pro Logic circuitry.	Software encoded with Dolby Surround can be identified with this mark. DOLBY SURROUND ●DVD ●Video CD ●CD ●Laser Disc ●Video tape
SUPER SURROUND (➡ page 34)	**MOVIE**	●This mode adds surround effects to movie software that hasn't been recorded with the above systems. ●In MOVIE mode you can adjust the volume of the surround speakers to get the best surround effect.	Any stereo sound source except for radio. ●DVD ●Video CD ●CD ●Cassette tape ●Laser Disc ●Video tape
	MUSIC	This mode adds surround effects to stereo sources.	
SIMULATED STEREO (➡ page 34)		This mode adds stereo-like effects to monaural sources.	Any monaural sound source except for radio. ●DVD ●Video CD ●CD ●Cassette tape ●Laser Disc ●Video tape

Amplifier modes

When using the above surround systems (except for SIMULATED STEREO), the amplifier is automatically switched to the surround mode.
In all other cases, the TRI-AMP mode (stereo) is engaged. In this mode, three separate amplifiers are used to drive the three sections (LOW, MID, and HIGH) of the two front speakers.

(On the tuner/amplifier)

Surround mode ⟷ TRI-AMP mode (stereo)

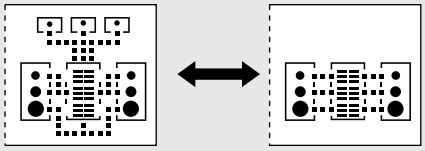

See pages 34 and 35 for operation.

Additional effects

Ⓐ Seat position
Ⓑ Center focus
Ⓒ Virtual rear surround
Ⓓ Multi rear surround
Ⓔ 3D enhanced surround

Ⓐ Seat position
Ⓑ Center focus
Ⓒ Virtual rear surround
Ⓓ Multi rear surround
Ⓔ 3D enhanced surround

Ⓐ Seat position
Ⓒ Virtual rear surround
Ⓓ Multi rear surround
Ⓔ 3D enhanced surround

When you select a surround effect, the corresponding indicator of the effects you can use lights.

Manufactured under license from Dolby Laboratories. “Dolby”, “Pro Logic” and the double-D symbol are trademarks of Dolby Laboratories. Confidential unpublished works. © 1992–1997 Dolby Laboratories. All rights reserved.

Ⓐ Seat position

Maintains the sound position even if the listening position is changed.

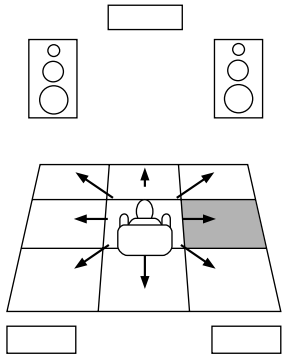

Ⓑ Center focus

- The sound from the center speaker appears to come from within the television.
  You can select one of two levels.
- The center speaker should be placed on top of the television.

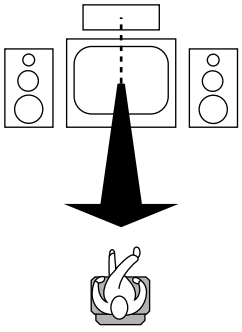

Ⓒ Virtual rear surround

If you have to place your surround speakers near the front speakers, the sound from the surround speakers appears to come from behind you.

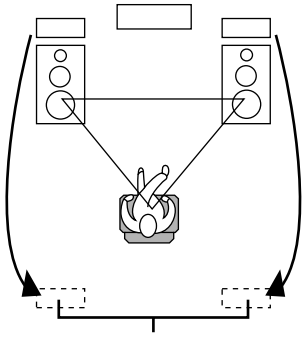

Virtual rear speakers

Ⓓ Multi rear surround

Feels like there are multiple surround speakers in your room, increasing a cinema-like atmosphere.

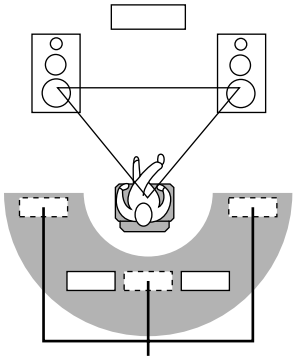

Virtual rear speakers

Ⓔ 3D enhanced surround

Adds width to the sound from the surround and front speakers.

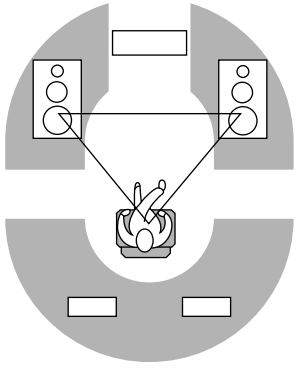

DOLBY DIGITAL

Play a DVD encoded with Dolby Digital.

A "DDDIGITAL" appears on the tuner/amplifier.

B **To down-mix Dolby Digital (5.1ch) signals to 2 channels**

Press [SHIFT] + [MIX 2CH].

To cancel

Press [SHIFT] + [MIX 2CH] again.

C **Speaker level adjustments**

Remote control only

If the level of the speakers appears to be different while listening to a source, adjust the levels of the speakers to the same apparent level.

① Press [SHIFT] + [TEST] to output a test signal.
A test signal is output from the speakers in the following order.
Lch: Front left speaker
Cch: Center speaker
Rch: Front right speaker
RSch: Right surround speaker
LSch: Left surround speaker
(No signal is output for the subwoofer.)

② Press [VOLUME (– or +)] to set the volume level of the front speakers normally used for enjoying the source.

③ While the speaker to be adjusted is outputting a signal
Press [▲] (to increase the level) or [▼] (to decrease the level).
The level of the speaker changes.

Repeat step ③ as desired.

To stop the test signal

Press [SHIFT] + [TEST] again.

To adjust the levels during play

❶ Press [CH SELECT] to select the speaker.
Each time you press the button:
Lch→Cch→Rch→RSch→LSch→SWch
↑_____|
SWch: Subwoofer (Adjust only when connected)

❷ Press [▲] or [▼] to adjust the level.

Repeat steps ❶ and ❷ as desired.

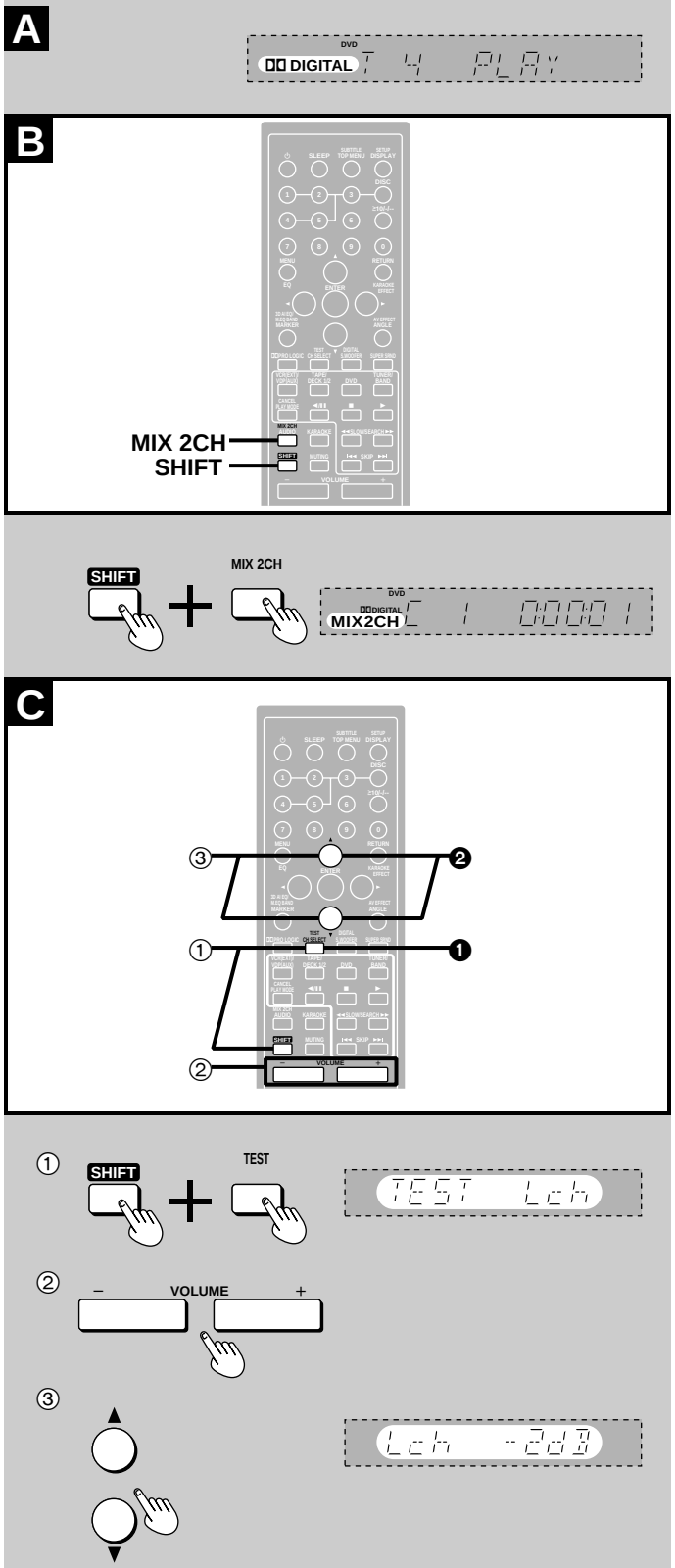

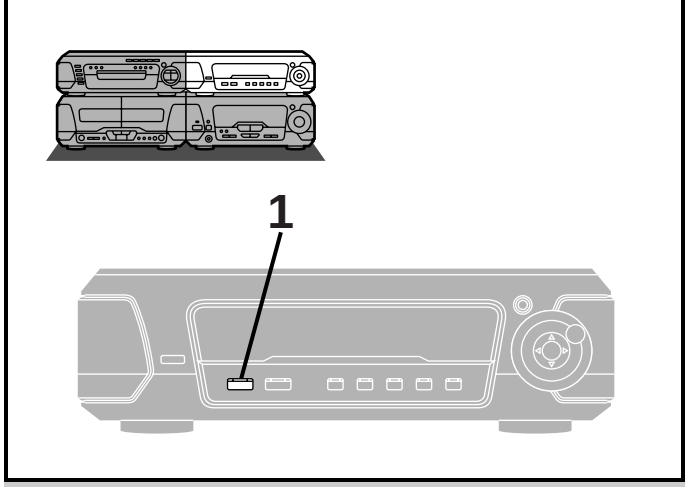

DOLBY PRO LOGIC

1 Press [PRO LOGIC, OFF/ON].
The indicator turns green.

2 Play a Dolby Surround source.

To cancel
Press [PRO LOGIC, OFF/ON] so the indicator goes out.

Note
Turn Dolby Pro Logic off when playing a DVD recorded with 5.1-channel Dolby Digital. The surround effects will not be reproduced correctly if this is left on.

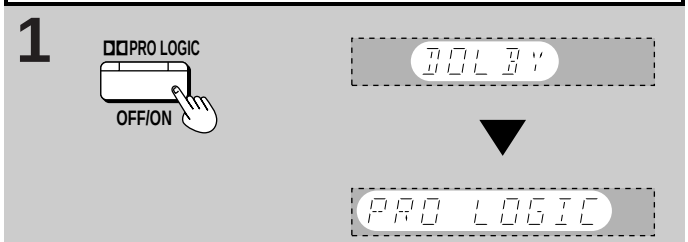

A Speaker level adjustments

Remote control only

If the level of the speakers appears to be different while listening to a source, adjust the levels of the speakers to the same apparent level.

① Press [SHIFT] + [TEST] to output a test signal.
A test signal is output from the speakers in the following order.
Lch: Front left speaker
Cch: Center speaker
Rch: Front right speaker
Sch: Surround speakers
② Press [VOLUME (− or +)] to set the volume level of the front speakers normally used for enjoying the source.
③ While the speaker to be adjusted is outputting a signal
Press [▲] (to increase the level) or [▼] (to decrease the level).
The level of the speaker changes.
Repeat step ③ as desired.

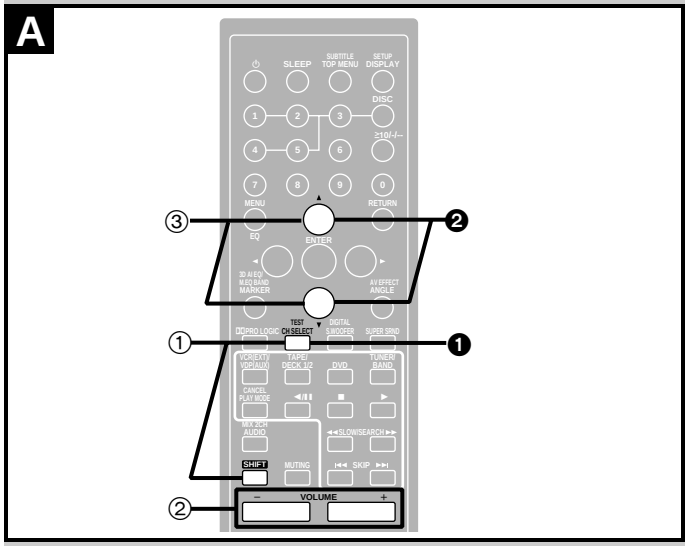

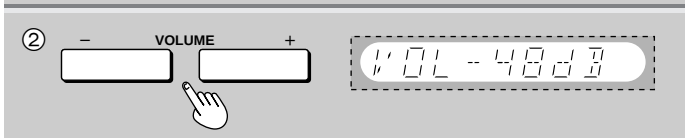

To stop the test signal
Press [SHIFT] + [TEST] again.

To adjust the levels during play
❶ Press [CH SELECT] to select the speaker.
Each time you press the button:
Lch→Cch→Rch→Sch
↑_____↓
❷ Press [▲] or [▼] to adjust the level.
Repeat steps ❶ and ❷ as desired.

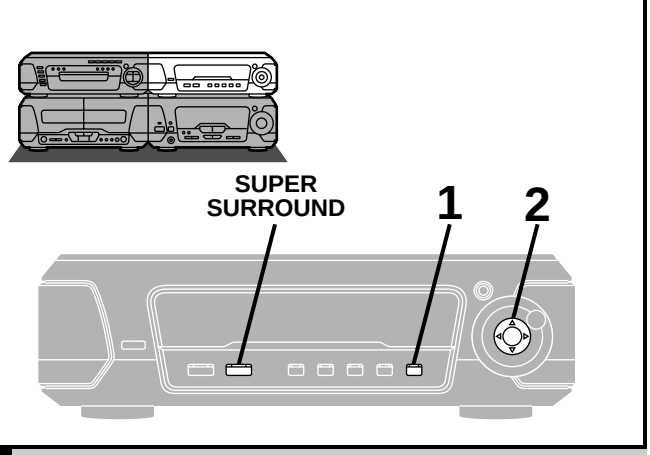

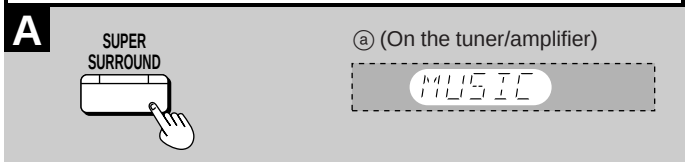

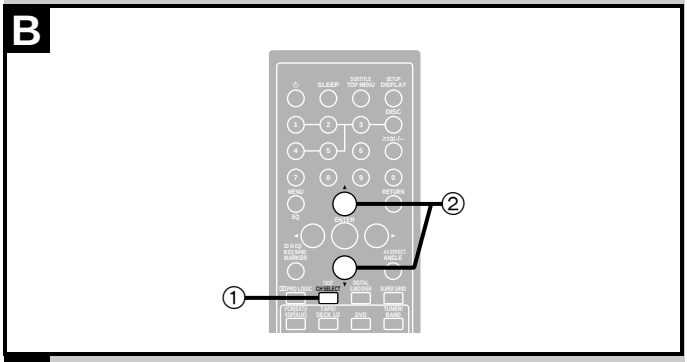

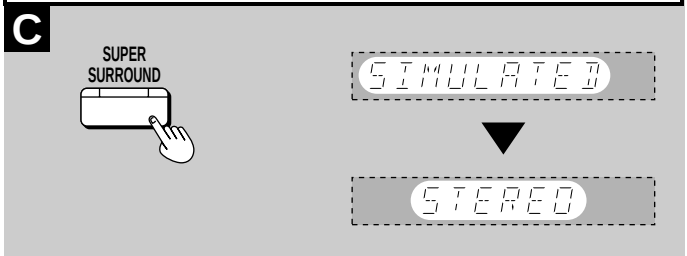

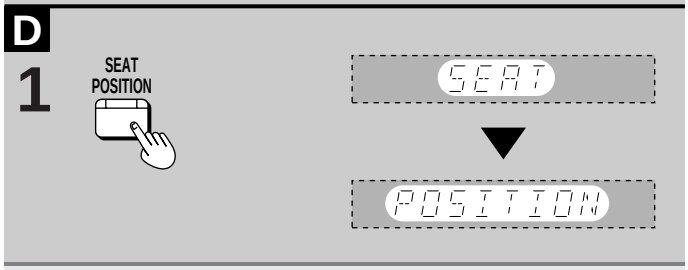

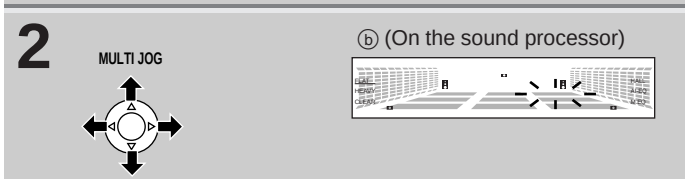

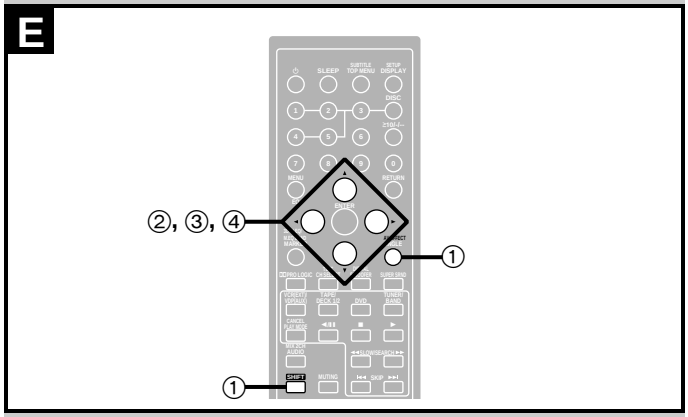

Enjoying surround sound

Note
Turn SUPER SURROUND or SIMULATED STEREO off when playing a DVD recorded with 5.1-channel Dolby Digital. The surround effects will not be reproduced correctly if this is left on.

A SUPER SURROUND

Press [SUPER SURROUND] and select "MOVIE" or "MUSIC".

The indicator turns green.
Each time you press the button:
MUSIC→**MOVIE**→SIMULATED STEREO
↑——STEREO SOUND※ (off)←——┘
※Original display when playing DVDs

To cancel
Press [SUPER SURROUND] to select "STEREO SOUND". The indicator goes out.

B Surround speaker level adjustments
While playing a source
① Press [CH SELECT].
② Press [▲] (to increase the level) or [▼] (to decrease the level).

C SIMULATED STEREO

Press [SUPER SURROUND] and select "SIMULATED STEREO".

The indicator turns green.
Each time you press the button:
MUSIC→MOVIE→**SIMULATED STEREO**
↑——STEREO SOUND※ (off)←——┘
※Original display when playing DVDs

To cancel
Press [SUPER SURROUND] to select "STEREO SOUND". The indicator goes out.

Surround effects

This effect is available when the indicator is lit.

D SEAT POSITION

1 Press [SEAT POSITION].
The indicator flashes green.

2 While the indicator is flashing (10 seconds)
Adjust the seat position with [MULTI JOG].

To cancel
① Press [SEAT POSITION] so the indicator flashes.
② Press [SEAT POSITION] again while the indicator is flashing so it turns orange.

E On the remote control
① Press [SHIFT] + [AV EFFECT].
② Press the cursor button [◄] or [►] so the "SEAT POSITION" indicator flashes.
③ Press [▲] (ON).
④ Adjust the seat position with [◄, ►, ▲, ▼] .
To turn it off, after steps ① and ② press [▼] so the indicator turns orange.

With virtual rear surround or 3D enhanced surround:
3 horizontal steps (ⓒ)

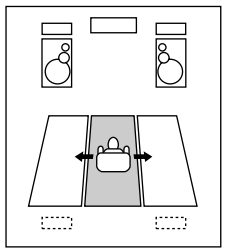

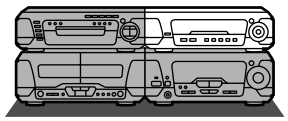

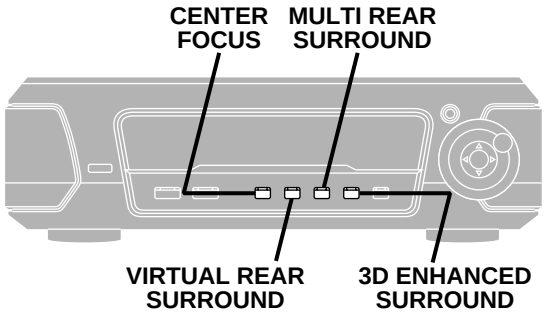

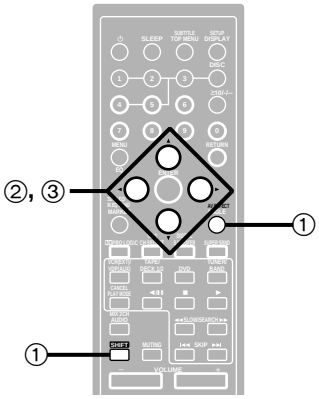

A

CENTER FOCUS

ⓐ (On the tuner/amplifier)

ⓑ (On the sound processor)

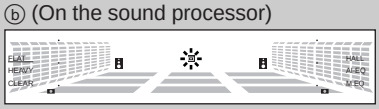

B

VIRTUAL REAR SURROUND

ⓐ (On the tuner/amplifier)

ⓑ (On the sound processor)

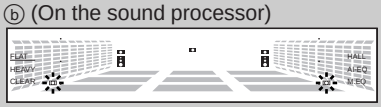

C

MULTI REAR SURROUND

ⓐ (On the tuner/amplifier)

ⓑ (On the sound processor)

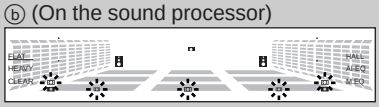

D

3D ENHANCED SURROUND

ⓐ (On the tuner/amplifier)

ⓑ (On the sound processor)

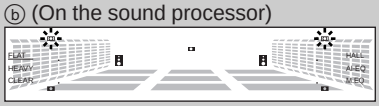

Surround effects

These effects are available when the corresponding indicators are lit.

A CENTER FOCUS

Press [CENTER FOCUS].

The indicator turns green.
Each time you press the button:
CENTER FOCUS 1→CENTER FOCUS 2→(off)
↑_____↓

To cancel
Press [CENTER FOCUS] so the indicator turns orange.

On the remote control
① Press [SHIFT] + [AV EFFECT].
② Press the cursor button [◄] or [►] so the “CENTER FOCUS” indicator flashes.
③ Press [▲] (to turn on or increase the level) or [▼] (to decrease the level or turn off).
(The indicator turns orange when off.)

B VIRTUAL REAR SURROUND

Press [VIRTUAL REAR SURROUND].

The indicator turns green.

To cancel
Press [VIRTUAL REAR SURROUND] so the indicator turns orange.

On the remote control
① Press [SHIFT] + [AV EFFECT].
② Press the cursor button [◄] or [►] so the “VIRTUAL REAR SURROUND” indicator flashes.
③ Press [▲] (ON) or [▼] (OFF).
(The indicator turns orange when off.)

C MULTI REAR SURROUND

Press [MULTI REAR SURROUND].

The indicator turns green.

To cancel
Press [MULTI REAR SURROUND] so the indicator turns orange.

On the remote control
① Press [SHIFT] + [AV EFFECT].
② Press the cursor button [◄] or [►] so the “MULTI REAR SURROUND” indicator flashes.
③ Press [▲] (ON) or [▼] (OFF) .
(The indicator turns orange when off.)

D 3D ENHANCED SURROUND

Press [3D ENHANCED SURROUND].

The indicator turns green.

To cancel
Press [3D ENHANCED SURROUND] so the indicator turns orange.

On the remote control
① Press [SHIFT] + [AV EFFECT].
② Press the cursor button [◄] or [►] so the “3D ENHANCED SURROUND” indicator flashes.
③ Press [▲] (ON) or [▼] (OFF).
(The indicator turns orange when off.)

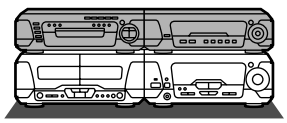

A

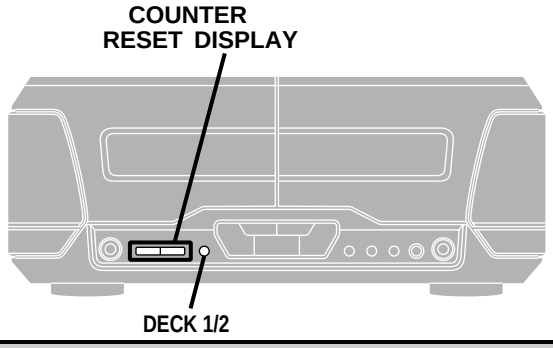

B

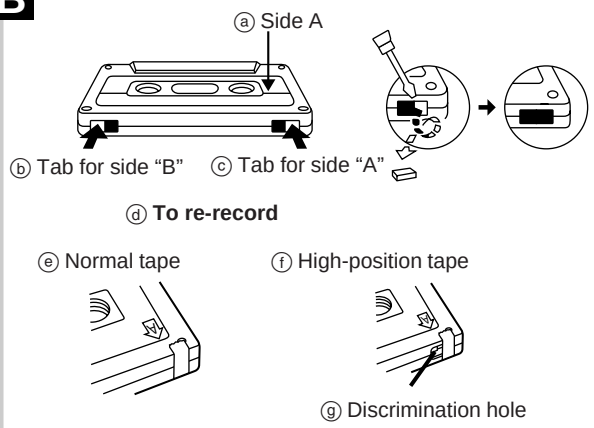

C

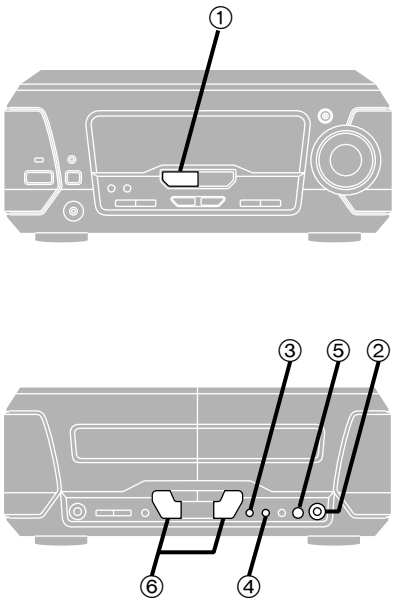

Before recording (Deck 2 only)

Selection of tapes for recording

The unit automatically identifies the type of tape.

Normal position/TYPE I	✔
High position/TYPE II	✔
Metal position/TYPE IV	✔

A To display the tape counter while recording

Press [COUNTER DISPLAY].

The counter is displayed for about 5 seconds.

To reset the tape counter

Press [COUNTER RESET].

- To display or reset the tape counter for deck 1, first press [DECK 1/2].

B Erasure prevention

The illustration shows how to remove the tabs to prevent recording. To record on the tape again, cover as shown, being careful not to cover the high position discrimination hole.

Volume, sound quality and surround effects

These have no effect on recording. Sound quality and surround effects are automatically set to flat when recording.

C Erasing recordings

① Press [INPUT SELECTOR] to select “TAPE”.
② Insert the recorded tape into deck 2.
③ Press [DOLBY NR] so the “DDNR” indicator goes out.
④ Select the reverse mode.
⑤ Press [● REC PAUSE].
⑥ Press [◁] or [▷].

Your attention is drawn to the fact that recording pre-recorded tapes or discs or other published or broadcast material may infringe copyright laws.

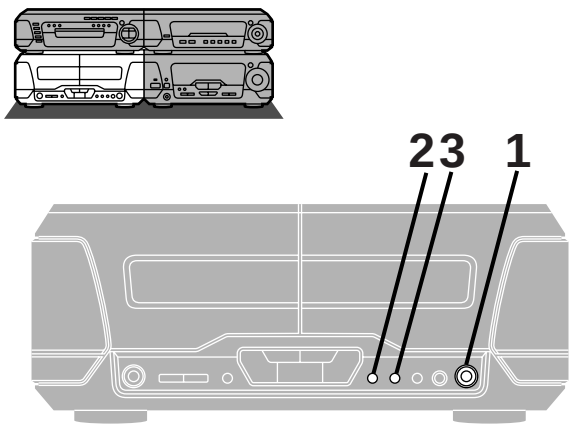

Preparatory steps

Do these steps before each recording.
Wind up the leader tape in deck 2 so recording can begin immediately.

1 Press [⏏ OPEN] on deck 2 and insert the cassette.

Insert the cassettes in both decks for tape-to-tape recording (➡ page 39).
DECK 1: For playback
DECK 2: For recording

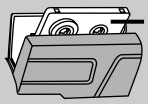

ⓐ Forward sida
ⓑ Tape facing down

2 Press [DOLBY NR] to select Dolby NR on (“DDNR” appears) or off.

(➡ “Dolby noise reduction”, page 27)

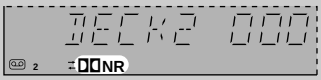

3 Press [REV MODE] to select the reverse mode.

Each time you press the button:
⇄: One side only records.
⇄ and ⊂⇄: Both sides record (forward→ reverse).
“⊂⇄” automatically changes to “⇄” when [● REC PAUSE], [CD EDIT] or [TAPE EDIT] is pressed.

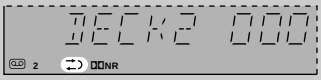

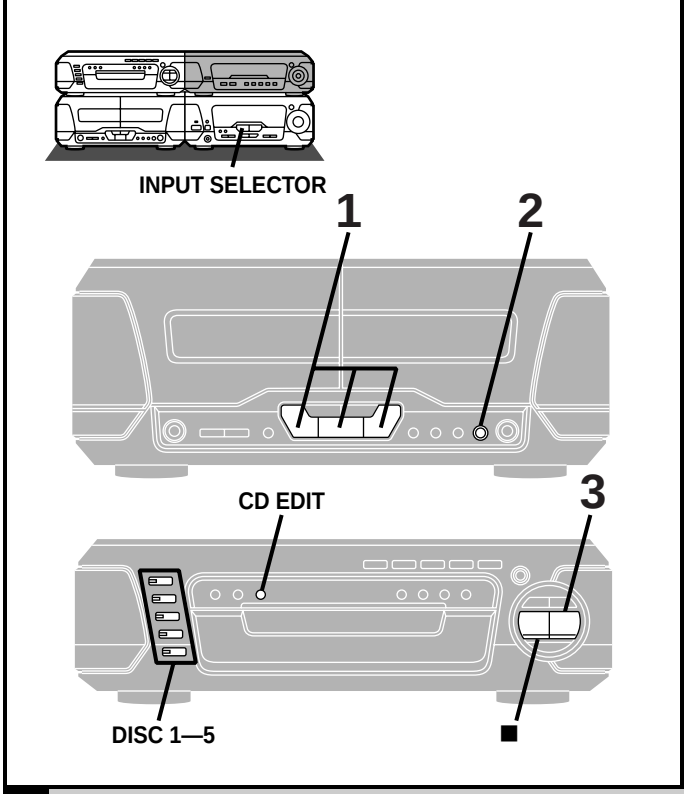

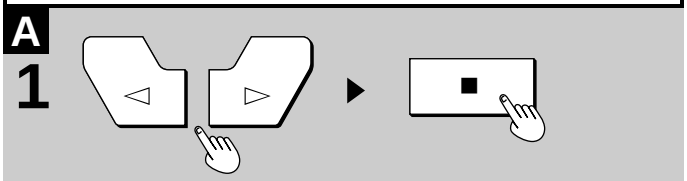

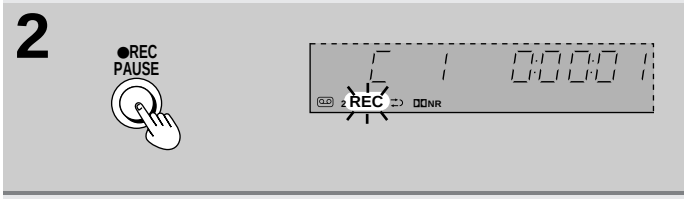

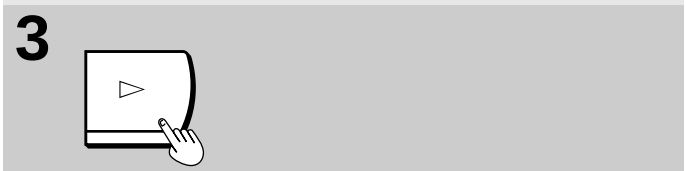

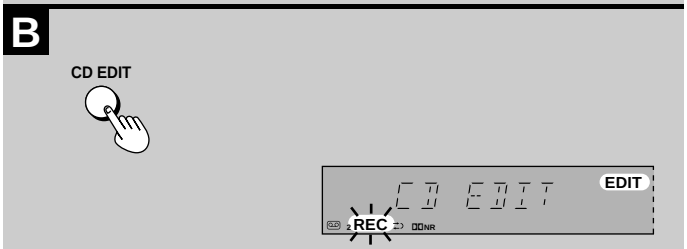

Recording discs

Preparation:
- Do the preparatory steps (➡ page 37).
- Insert the disc(s) you want to record (➡ page 14).
- Press [DISC 1]–[DISC 5] to select the disc you want to start recording, then press [■] twice to stop the disc.

A Normal recording

DVD V-CD CD

1 Press [◁] (reverse side) or [▷] (forward side) then [■] to set the tape direction.

2 Press [● REC PAUSE].

3 Press [▷] on the changer.

Recording starts automatically.
4 seconds after the disc(s) finishes, the deck goes into the recording standby mode.

To stop recording
EITHER
Press [■] on the changer.
The deck goes into recording standby mode 4 seconds later.
OR
Press [■] on the deck.
Recording stops immediately but the disc continues to play.

To record programmed tracks
Program tracks before step 1 (➡ page 20).

B One touch disc editing

V-CD CD

This function makes it easier for you to record from Video CDs and CDs.
- When recording, if a track is cut off in mid-track at the end of the forward side, it is recorded from the beginning on the reverse side. (Ensure the reverse mode "⇄" is selected.)
- At the end of the reverse side recording stops and the current track will be interrupted.

Press [◁] or [▷] then [■] to set the tape direction, and press [INPUT SELECTOR] to select "DVD" as the source, then

Press [CD EDIT].

Recording starts. In the meantime, "CD EDIT" will scroll across the display from right to left.
After edit-recording has finished, the cassette deck automatically stops.

To stop editing
Press [■] on the changer. The cassette deck also stops.
"EDIT OUT" is displayed.

To edit programmed tracks
Program the tracks (➡ page 20) and press [CD EDIT].

For your reference:
- "ALL DISC" or "1-DISC" can be combined (➡ page 15).
- PBC on Video CDs is automatically canceled.
- "ERROR" is displayed if the disc in the playing position is a DVD or the resume function is activated.

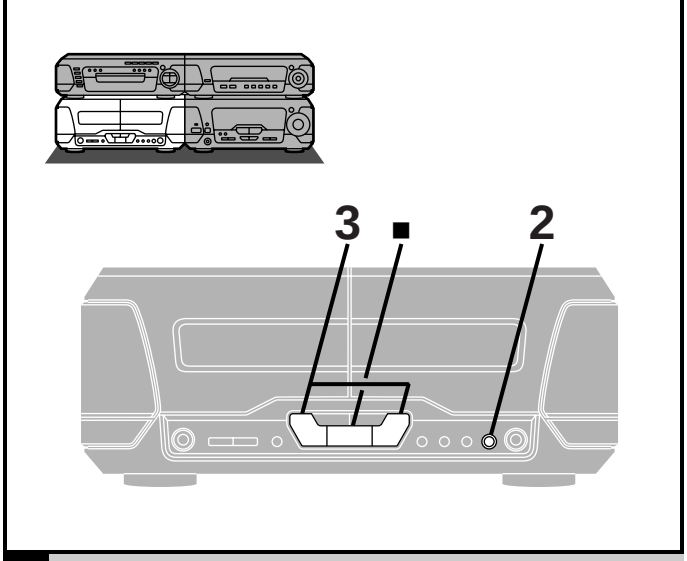

A

2

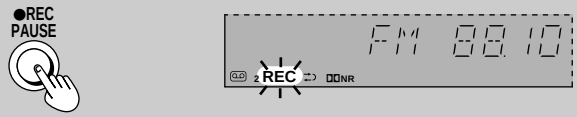

3

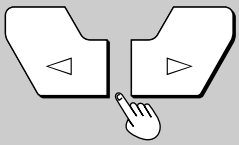

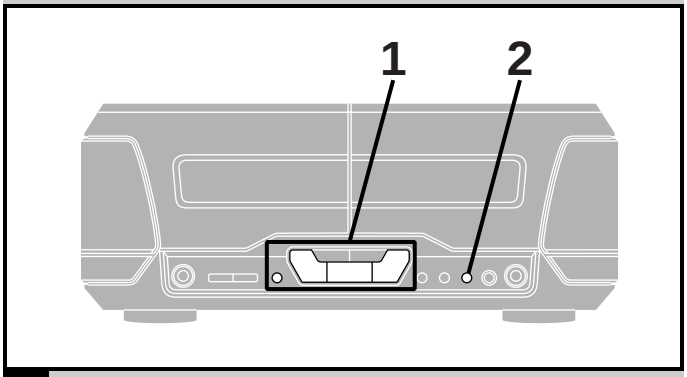

B

1 ①

②

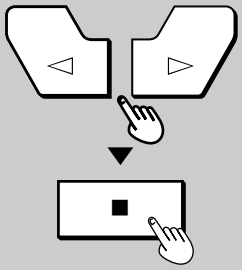

2

A Recording the radio

Preparation: Do the preparatory steps (➡ page 37).

1 Tune to the required station.

(➡ page 24 or 25)

2 Press [● REC PAUSE].

The deck goes into the recording standby mode and the play indicator "◁" or "▷" starts flashing.

3 Press [◁] (reverse side) or [▷] (forward side) to start recording.

To stop recording

Press [■].

To pause recording

Press [● REC PAUSE].
The deck goes into recording standby mode.
To resume recording press the flashing [◁] or [▷].

B Tape-to-tape recording

Preparation: Do the preparatory steps 1 and 3 (➡ page 37).

1 Set the tape direction on both decks.

① Press [DECK 1/2] to select "DECK 2".
② First press [◁] or [▷], and then [■].

Repeat steps ① and ② for deck 1.

2 Press [TAPE EDIT] to start recording.

The indicator "◁" or "▷" shows deck 2 direction.
If either deck stops, the other deck also stops.

To stop recording

Press [■].
Both decks will stop.

To enjoy another source while recording

Start playing the other sound source.
You can change the volume level and tone quality without affecting the recording.

Note

The recording level and the noise reduction effect of the original (play) tape will be recorded on the new tape.

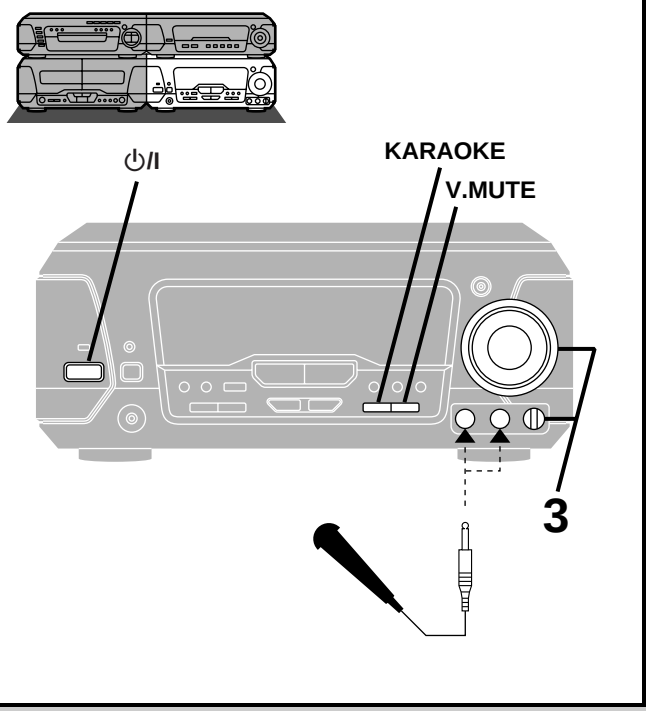

3

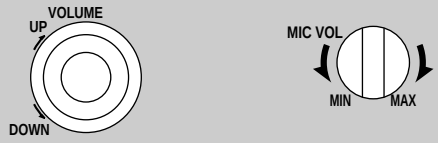

A

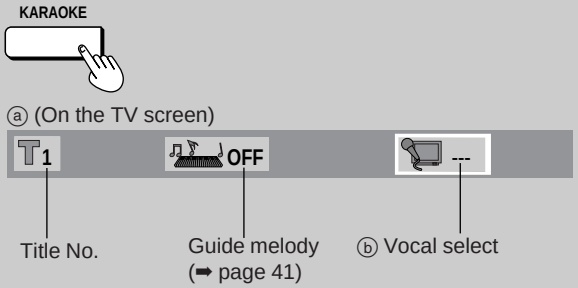

B

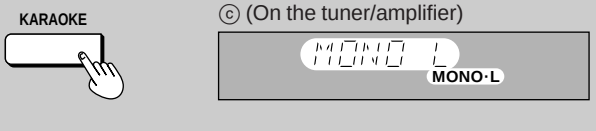

C

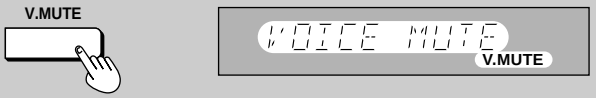

Enjoying KARAOKE

(Except for the United Kingdom, Continental Europe, Australia and N.Z.)

DVD V-CD CD

Preparation:

- Press [⏻/I] to turn the unit on.
- Turn on the television and switch the video input mode of the television to suit the type of connection you have made (e.g., VIDEO 1).
- Lower volume with [MIC VOL], then connect the microphone(s) to the microphone jack(s). (Plug type 6.3 mm monaural)

1 Start the source.

2 Select the Karaoke mode.

See below (A, B or C) for operation details.

3 Adjust the main volume and microphone volume.

A Karaoke DVD

Icons are displayed on the television to assist operation.

Press [KARAOKE] to select the appropriate mode.

(Refer to the jacket concerned for Karaoke mode.)

Each time you press the button:

●Solo		●Duet	
--- :	Vocal off	--- :	Vocal off
ON:	Vocal on	1+2:	Vocal 1 + 2 on
		V1:	Vocal 1 on
		V2:	Vocal 2 on

On the remote control

① Press [KARAOKE].

② Press the cursor button [◀] or [▶] to select the vocal select mode.

③ Press [▲] or [▼] to select the appropriate mode.

●To select another song

Press the cursor button [◀] or [▶] to select T1 and press [▲] or [▼] to select the number for the song.

Other sources (except for radio)

The changes in Karaoke mode are shown on the tuner/amplifier.

B Video CD/CD/cassette tape (multiplex)

Press [KARAOKE] to turn the vocals off.

Each time you press the button:

MONO L: Vocal off (Lch only)
MONO R: Vocal on (Rch only)
(off): Karaoke mode canceled.

C DVD/Video CD/CD/cassette tape/video tape (non-Karaoke)

Press [V.MUTE] to turn the vocals off.

V.MUTE: Vocal off
(off): Karaoke mode canceled.

Note

- The Karaoke modes cannot be used with the radio, 3D AI EQ or surround effects (➡ pages 29 and 30).
- If a strange noise (squealing or howling) is emitted during use, move the microphone away from the speakers, or turn down the microphone volume.
  When you are not using the microphone, disconnect it from the MIC jack, and turn down the microphone volume level to MIN.

When using the VOICE MUTE function

Voice mute may not function sufficiently or noise may interfere when using the following software.

- Monaural software
- Software with few musical instruments, including classical music and poetry recitations
- Software with duets or strong choruses

To record your performance

Start recording in deck 2 and then start singing.

Enjoying KARAOKE (Except for the United Kingdom, Continental Europe, Australia and N.Z.)

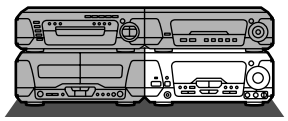

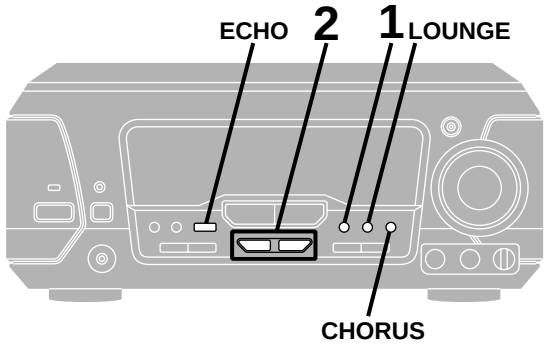

A Using the echo effect

Press [ECHO].

Each time you press the button:
ECHO 1→ECHO 2→ECHO 3
↑——— ECHO OFF ———┘

B Changing the key (up to 6 steps)

1 Press [KEY CON].

"KEY 0" appears on the display.

2 Press [TUNING (♭ or ♯)] to change the key.

♭: Lower the key by a halftone (−1, −2, −3)
♯: Raise the key by a halftone (+1, +2, +3)

To restore the original key

Press [KEY CON] to display "KEY OFF" on the tuner/amplifier.

C Giving the effect of singing at a Karaoke bar

Press [LOUNGE].

Each time you press the button:
LOUNGE 1→LOUNGE 2→LOUNGE 3
↑————LOUNGE OFF————┘

To cancel the effect

Press [LOUNGE] to select "LOUNGE OFF".

D Giving the effect of singing in a chorus

Press [CHORUS].

Each time you press the button:
CHORUS 1→CHORUS 2
↑—CHORUS OFF—┘

To cancel the effect

Press [CHORUS] to select "CHORUS OFF".

E Selecting the Karaoke effect with the remote control

① Press [SHIFT] + [KARAOKE EFFECT].
② Press [◀] or [▶] to select the desired effect.
ECHO↔KEY↔LOUNGE↔CHORUS
↑————————————————┘
③ Press [▲] or [▼] to select the desired level.

E Using the guide melody function

Remote control only

This function can be used only with some Karaoke DVDs.

When singing a song whose melody you do not know well, use this function to raise the volume of the melody.

❶ Press [KARAOKE] to display the Karaoke screen.
❷ Select the guide melody with [◀, ▶] .
❸ Select the desired level with [▲, ▼] .
1: Normal volume
2: Louder volume
OFF: Guide melody off

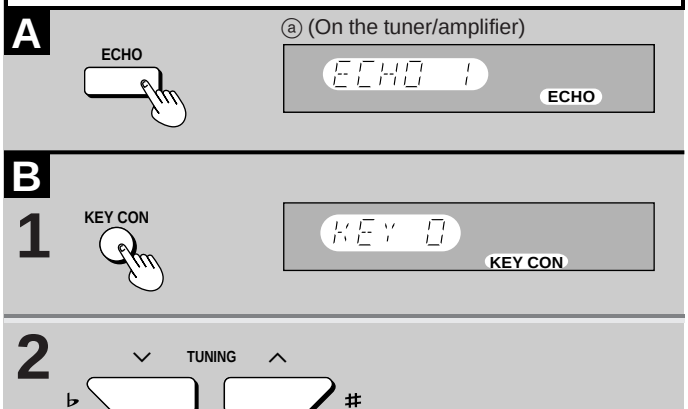

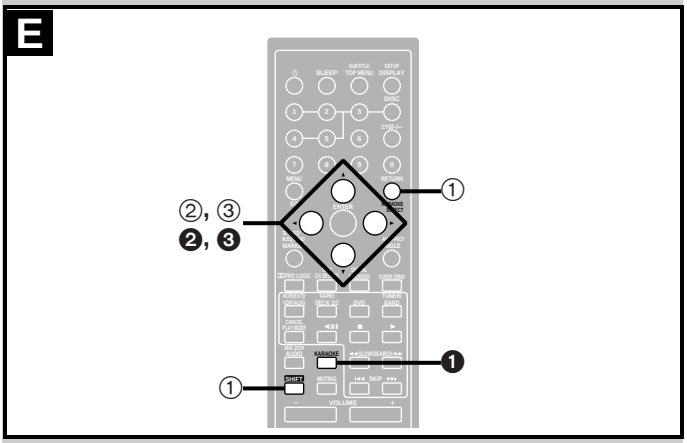

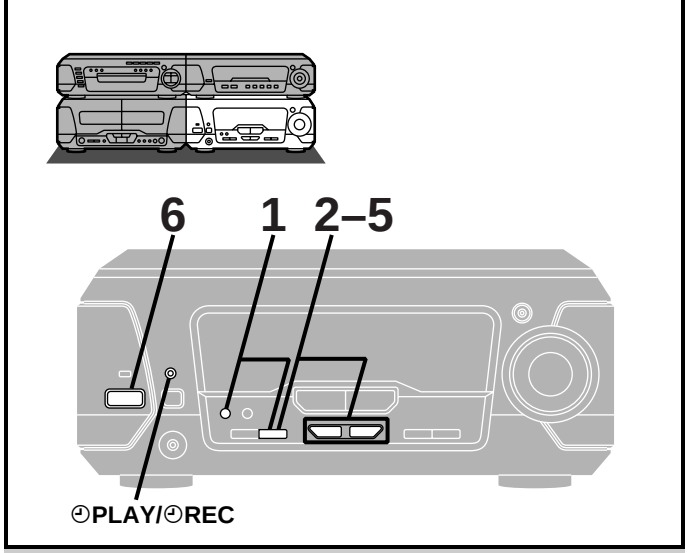

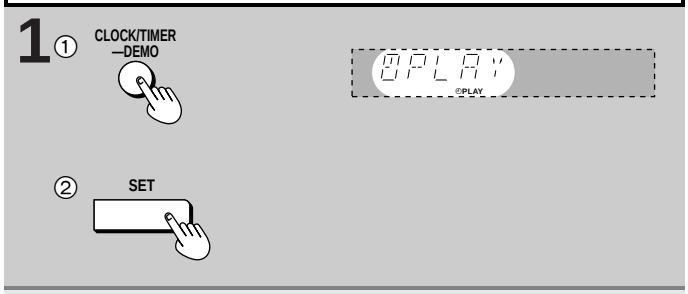

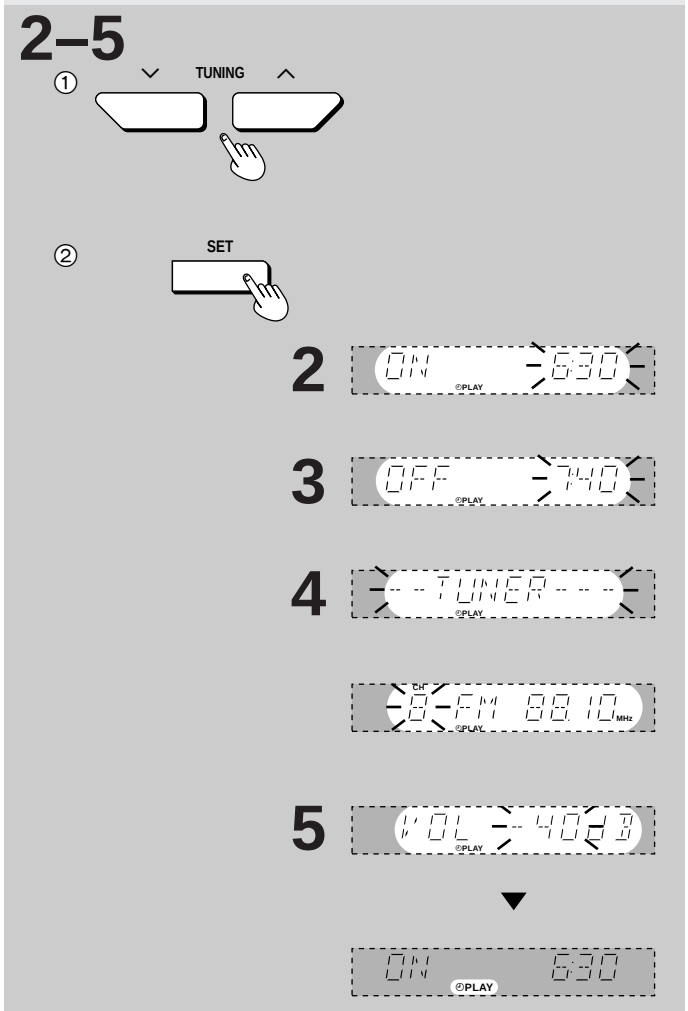

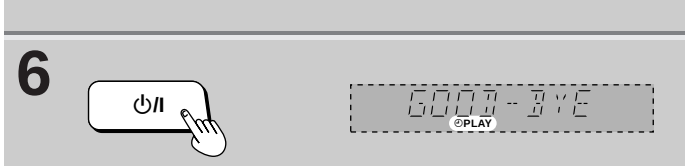

Using the timers

The play timer

This timer starts play of a selected source at a selected time.
The example shows settings for preset radio channel 8 to play between 6:30 and 7:40 at −40 dB.

Preparation: Turn the unit on, set the time (➡ page 12), preset radio stations if you want the timer to start playing the radio (➡ page 25).

1 ① Press [CLOCK/TIMER, −DEMO] to select "⏲PLAY."

Each time you press the button:
CLOCK→⏲PLAY→⏲REC→Original display

② Press [SET] within 3 seconds.

2–5 ① Press [TUNING (∨ or ∧)] to select the appropriate setting and ② press [SET] to confirm.

2 Select the start time.

3 Select the finish time.

4 Select the source.
TUNER⟷DVD⟷TAPE

Insert a disc or tape if you select these sources.

If you select TUNER
Select a preset channel.

5 Select the volume.

The play timer is now on standby. The display shows each setting again then restores the original display.

6 Press [⏻/I] to turn the unit off.

The "⏲PLAY/⏲REC" indicator remains lit to show the play (or record) timer is on even when ECO mode is selected (➡ page 12).

The timer starts at the set time with the volume increasing gradually to the set level.

To cancel the timer
Press [⏲PLAY/⏲REC] so "⏲PLAY" goes out.
Each time you press the button:
⏲PLAY→⏲REC→⏲PLAY ⏲REC→Light off (OFF)

The play timer function will be canceled, but the settings stay in memory.

For your reference:
When you insert cassettes in decks 1 and 2, deck 1 has priority.

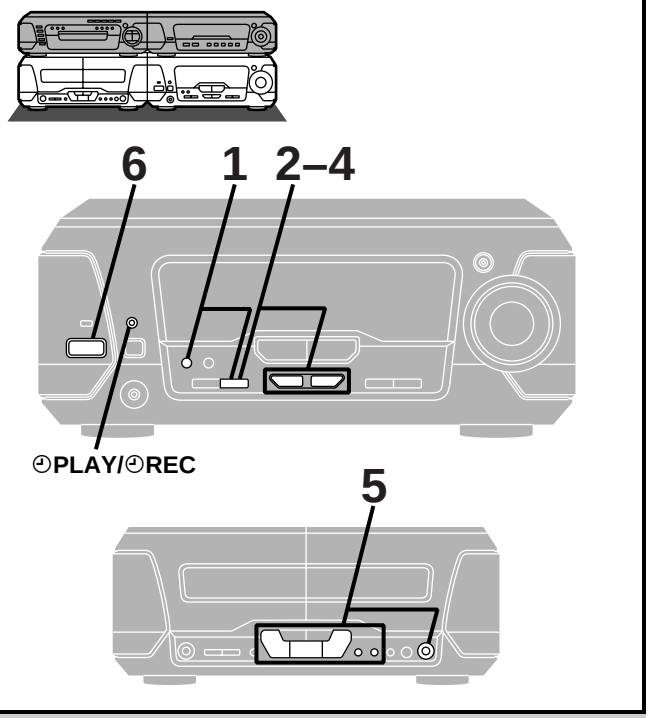

The record timer

This timer records the radio at a set time.
The example shows settings for recording preset channel 8 from 18:30 to 19:30.

Preparation: Turn the unit on, set the time (➡ page 12), preset radio stations (➡ page 25).

1 ① Press [CLOCK/TIMER, –DEMO] to select "REC".

Each time you press the button:
CLOCK→PLAY→REC→Original display

② Press [SET] within 3 seconds.

2–4 ① Press [TUNING (∨ or ∧)] to select the appropriate setting and ② press [SET] to confirm.

2 Select the start time.

3 Select the finish time.

4 Select the preset channel.

The record timer is now on standby. The display shows each setting again then restores the original display.

5 Prepare for recording.

① Insert a tape into deck 2.
② Select the Dolby NR mode.
③ Select the reverse mode.
④ Select the tape direction.

6 Press [⏻/I] to turn the unit off.

The "PLAY/REC" indicator remains lit to show the record (or play) timer is on even when ECO mode is selected (➡ page 12).

Recording starts 30 seconds before the set time with the volume muted during the set time.

To cancel the timer

Press [PLAY/REC] so "REC" goes out.
Each time you press the button:
PLAY→REC→PLAY REC→Light off (OFF)

The record timer function will be canceled, but the settings stay in memory.

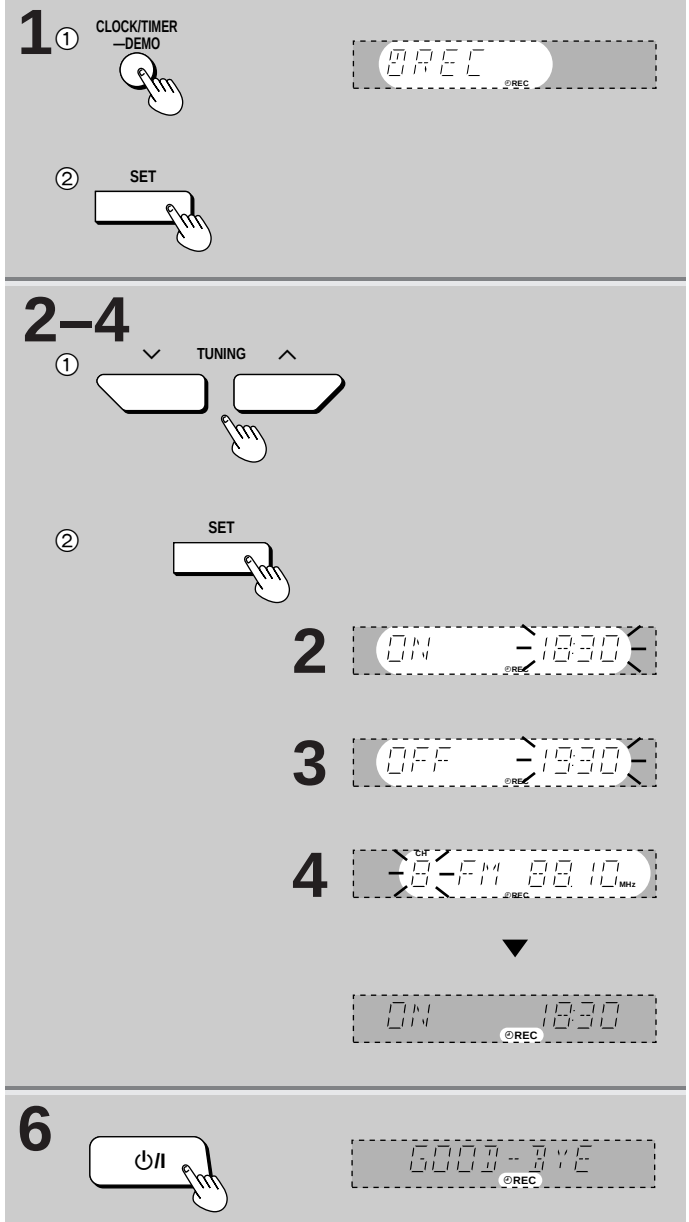

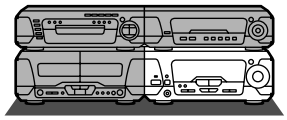

A

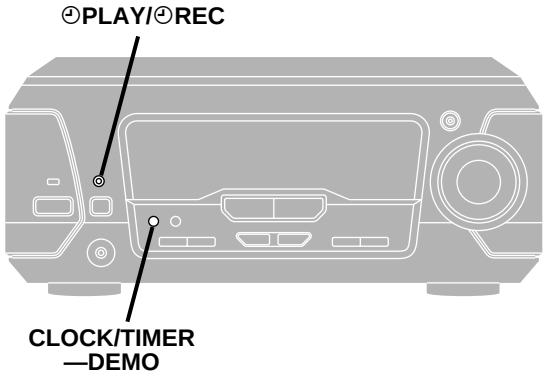

B

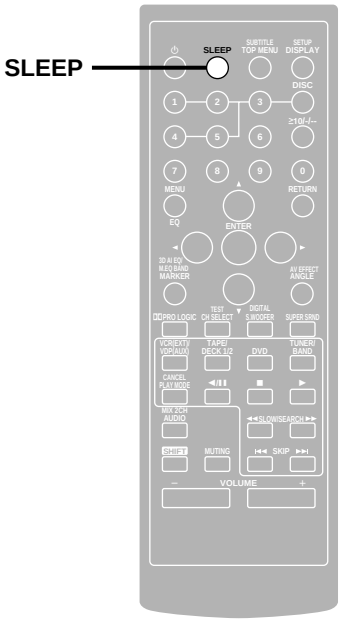

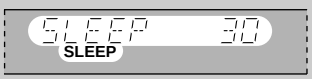

A The play and record timers

Checking the timers

Press [CLOCK/TIMER, –DEMO] to select "◴PLAY" (or "◴REC").
The timer settings are shown in the following order:
Play timer:
Start time→Finish time→Source→Volume
Record timer:
Start time→Finish time→Broadcast station you select

The timers can be checked even if the unit is off.

Playing the unit after the timers are set

The unit can be used after the timers are set, but ensure the unit is off before the set start time.

Turning the timers on and off

The timers come on at the set times if the "◴PLAY/◴REC" indicator is lit. They can be turned on and off by pressing [◴PLAY/◴REC] (➡ pages 42 and 43).

Note

- If you turn the unit off and on again while a timer is functioning, the finish time setting will not be activated.
- If the power is on, the timer will not function. The system must be in the standby mode.
- This system retains the ON/OFF time settings until you make a new setting. If you make a new ON time setting, you must make a new OFF time setting.

B The sleep timer

Remote control only

This timer turns the unit off after a set time.

Press [SLEEP] to select the time (minutes).

Each time you press the button:
SLEEP 30⟶SLEEP 60⟶SLEEP 90
⟶SLEEP OFF⟵SLEEP 120⟵

To cancel the sleep timer

Press [SLEEP] to select "SLEEP OFF".
"SLEEP" goes out.

To confirm the remaining time

(While the timer is functioning)
Press [SLEEP].
The remaining time is shown for about 5 seconds.

To change the setting

Press [SLEEP] to display the remaining time, then press again to select the required time.

Using the timers together

Any of the timers can be used together, but ensure the unit is off before the start time for the record and play timers.

Changing the initial settings

Remote control only

Once the initial settings have been completed, the system can always be operated under the same settings.

Preparation: Press [DVD] to select “DVD” as the source.

1 **While stopped**

Press [SHIFT] + [SETUP].

The initial settings menu is displayed.

2 **Press [▲] or [▼] to highlight an item, and press [ENTER].**

3 **Press [◄, ►, ▲, ▼] to select an item and press [ENTER].**

Repeat step 3 as the menus require to make changes.

Steps 2 and 3 can also be done with the numbered buttons.
Press the number next to the required item. For example, press [3] to select “3 Menu Language”.

To return to the previous screen
Press [RETURN].

To exit the initial settings menu
Press [RETURN].

Note
The initial settings menu will not be displayed if one of the program/ random/ALL DISC modes is activated.

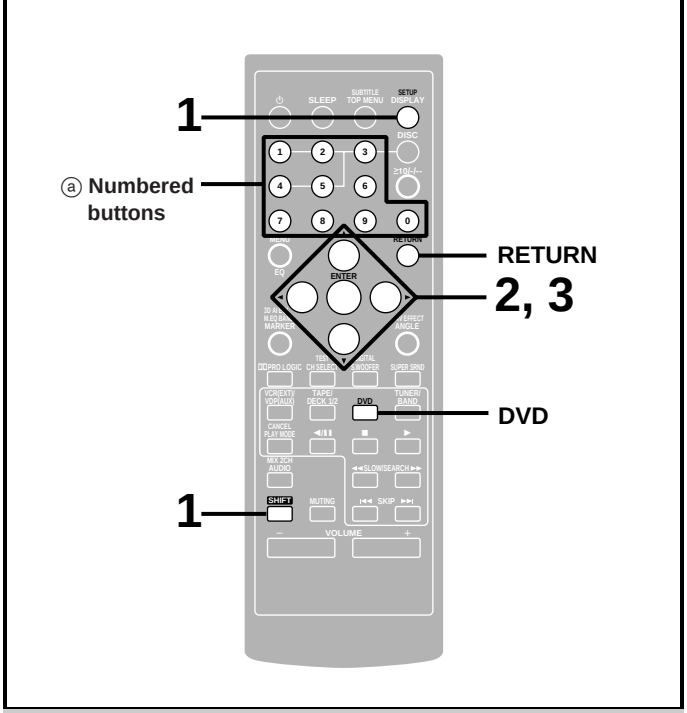

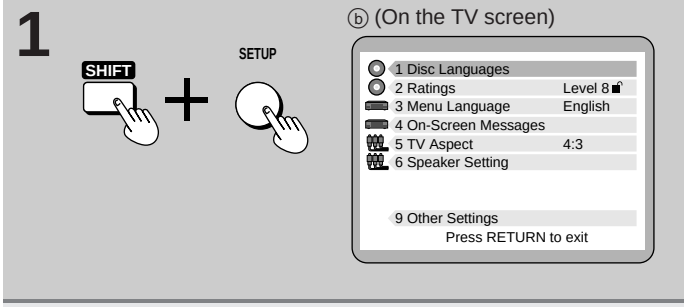

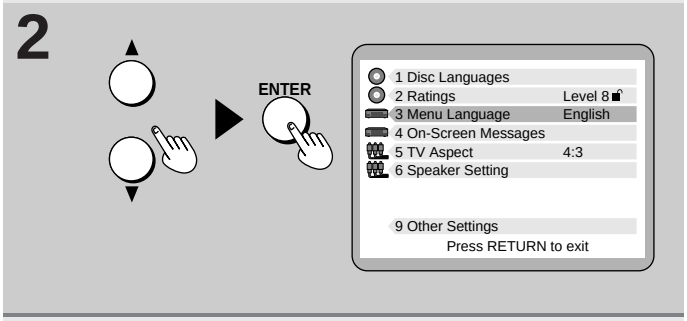

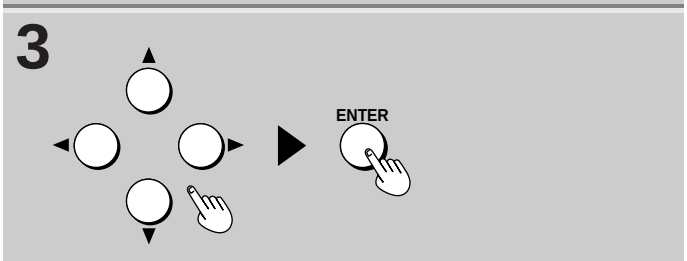

Summary of initial settings

This chart shows the initial settings for this unit. See page 45 for details on menu operation.

- The menu and on-screen message language has been factory preset to English. You can change the language by going to “3 Menu Language”.
- There is no item 7 or 8.

Item	Function	Options
1 Disc Languages	Select the soundtrack language.	1 Audio
	Select the subtitle language.	2 Subtitle
	Select the language for the top menu and other menus shown by the disc.	3 Menus
2 Ratings	Set a ratings level for playing a DVD.	**Setting ratings** (When level 8 is selected) Level 8: All DVDs can be played. Level 1 to level 7: Prohibits play of DVDs with corresponding ratings recorded on them. Level 0: Prohibits play of all DVDs.
		Changing ratings (When level 0–7 is selected) 1 Unlock Player 3 Change Level 2 Change Password 4 Temporary Unlock
3 Menu Language	Select the language used for menus and messages the unit displays on the television (including these menus).	1 English 4 Italiano 2 Français 5 Español 3 Deutsch
4 On-Screen Messages	Choose whether to show the on-screen messages that appear on the television when you perform operations.	1 On-Screen Messages
	Select the colour and position of on-screen massages and GUI.	2 Colour and Position
5 TV Aspect	Select the aspect ratio that suits your television (➡ page 8).	1 4:3 (Regular television) 2 16:9 (Widescreen television)
6 Speaker Setting	Set the delay time for your center and surround speakers (➡ page 48).	Center speaker delay time
		Surround speakers delay time
9 Other Settings	Select a picture type for when the picture is paused.	1 Still Mode
	Select whether to have sound on or off during the first level of forward search (DVD/Video CD only).	2 Audio during Search
	Select to view how software made for a widescreen television is displayed on a regular television (➡ page 49).	3 TV Mode (4:3)
	Select whether to have dynamic range compression during play of Dolby Digital software.	4 D. Range Compression
	Select whether to show the picture type (I/P/B) when a DVD is paused.	5 Still Picture Display
	Select whether to output the video signal on NTSC discs as PAL 60 or as NTSC.	6 NTSC Disc output

- Shaded items are the factory settings.
- Changes to the initial settings remain intact after the unit is turned off.
  Do the setting procedures again to restore to the original settings.

	Remarks
1 English 4 Italian 7 Other ∗∗∗∗ 2 French 5 Spanish 3 German 6 Original	●Some discs are designed to start in a certain language despite any changes you make here. ●**"Other ∗∗∗∗":** Input a code number with the numbered buttons (➡ page 49). ●**"Original"**: The original language of each disc will be selected. ●**"Automatic"**: If the language selected for "1 Audio" is not available, subtitles of that language will automatically appear if available on that disc.
1 Automatic 4 German 7 Other ∗∗∗∗ 2 English 5 Italian 3 French 6 Spanish	
1 English 4 Italian 2 French 5 Spanish 3 German 6 Other ∗∗∗∗	
	●The password screen is shown if you choose levels 0 to 7 (➡ page 48). ●The DVDs must have ratings levels recorded on them for this feature to be effective. Discs with this feature will be marked.
	If the level 0 to level 7 has been selected, the password screen is shown when you select "2 Ratings". Enter your password with the numbered buttons and press [ENTER]. The menu for changing ratings appears.
1 On 2 Off	
1 Blue 4 Blue 2 Violet 5 Violet 3 Green 6 Green	
0 ms 3.9 ms 1.3 ms 5.3 ms 2.6 ms	For optimum listening with 5.1 channel sound, all the speakers, except for the subwoofer, should be the same distance from the listening position. You can adjust the delay time for the center and surround speakers to adjust for differences in distances between the speakers. These adjustments are effective when playing DVDs recorded in Dolby Digital.
0 ms 10.6 ms 5.3 ms 15.9 ms	
1 Automatic 2 Field 3 Frame	Field: Less blurred field stills are shown. Select if jittering occurs when "1 Automatic" is selected. Frame: Sharper frame stills are shown. Select if small text or fine patterns cannot be seen clearly when "1 Automatic" is selected.
1 On 2 Off	
1 Pan & Scan 2 Letterbox	
1 Off 2 On	Dynamic range is the difference between the loudest sound and the softest sound. By compressing this range, you can listen at low volume but still enjoy clear dialog.
1 Off 2 On	
1 PAL60 (Factory setting: "NTSC" for Russia, 2 NTSC "PAL60" for others)	●If you have connected a PAL system television, select "1 PAL60". ●If you have connected an NTSC system television, select "2 NTSC".

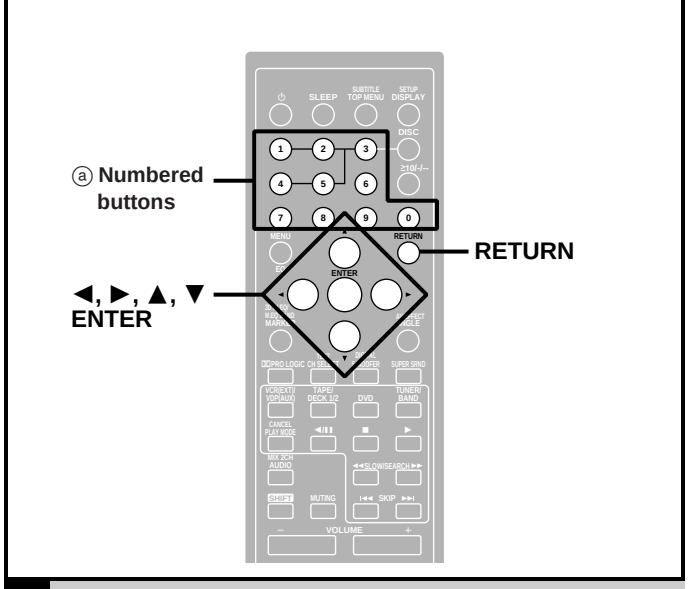

A Entering a password

The password screen is shown if you choose levels 0 to 7.
① Input a 4-digit password with numbered buttons and press [ENTER].
② Press [ENTER] to confirm the 4 digits.
Press [RETURN] to restore the original display.

To change the level setting or the password

❶ Select “2 Ratings”.
The password screen is shown.
❷ Input the password with the numbered buttons and press [ENTER].
❸ Select the item with [▲] or [▼] and press [ENTER].

B Calculating delay time

① Select “Center delay time” or “Surround delay time” with [◄, ►, ▲, ▼] and press [ENTER].
② Select the desired delay time with [▲] or [▼] and press [ENTER].

Center speaker delay time

If D1 ≦ D2, then set the delay time to 0 ms.
If D1 > D2, then set the delay time as follows:

Difference between D1 and D2	Delay time
50 cm	1.3 ms
100 cm	2.6 ms
150 cm	3.9 ms
200 cm	5.3 ms

Surround speaker delay time

If D1 ≦ D3, then set the delay time to 0 ms.
If D1 > D3, then set the delay time as follows:

Difference between D1 and D3	Delay time
200 cm	5.3 ms
400 cm	10.6 ms
600 cm	15.9 ms

D1: The distance from the front speaker
D2: The distance from the center speaker
D3: The distance from the surround speaker

A

B

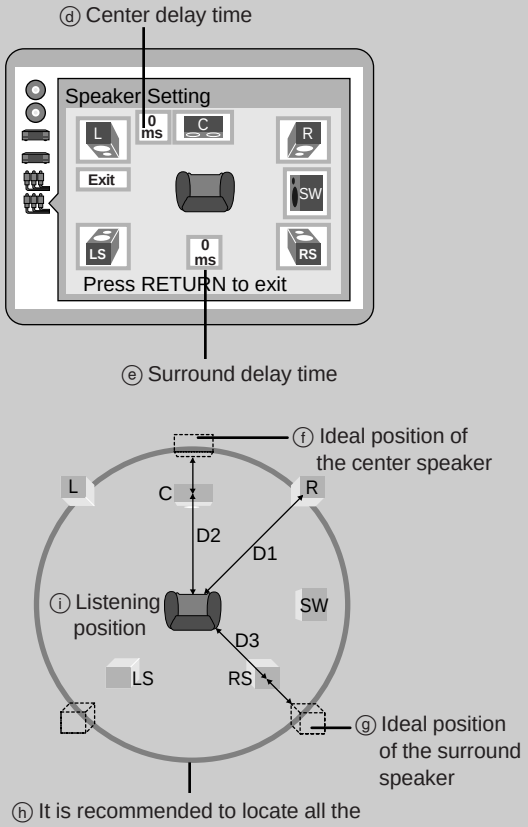

How different kinds of software appear on your television

DVD software is recorded in a variety of picture formats, and how they appear on your television depends on the software, the kind of television you have, and the picture mode your television is set to.

- Letterbox refers to pictures where black bands appear at the top and bottom.
- Pan and Scan refers to pictures where part of the picture is cut off so it fills the whole screen.

Television and picture mode / Software format	4:3	16:9 Full mode	16:9 Zoom mode	16:9 Auto mode
ⓐ **Wide screen, pan and scan**	ⓑ Edges cut off	ⓒ Full screen	ⓓ Top and bottom cut off	ⓔ Full screen
ⓕ **Wide screen, non-pan and scan**	ⓖ Letterbox			
ⓗ **Regular (4:3)**	ⓘ Full screen	ⓙ Screen stretched horizontally	ⓚ Top and bottom cut off	ⓛ Full screen with black bands on the left and right
ⓜ **Regular (4:3) letterbox**	ⓝ Letterbox	ⓞ Letterbox with screen stretched horizontally	ⓟ Full screen	ⓠ Letterbox with extremities of picture stretched

The names given to the television picture modes depend on the maker of your television. There may also be slight differences in how the pictures appear on the screen. Refer to your television's operating instructions for details.

Language code list

6566: Abkhazian	6779: Corsican	7273: Hindi	7783: Malay	8365: Sanskrit	8479: Tonga
6565: Afar	7282: Croatian	7285: Hungarian	7776: Malayalam	7168: Scots Gaelic	8482: Turkish
6570: Afrikaans	6783: Czech	7383: Icelandic	7784: Maltese	8382: Serbian	8475: Turkmen
8381: Albanian	6865: Danish	7165: Irish	7773: Maori	8372: Serbo-Croatian	8487: Twi
6577: Ameharic	7876: Dutch	7378: Indonesian	7782: Marathi	8378: Shona	8575: Ukrainian
6582: Arabic	6978: English	7365: Interlingua	7779: Moldavian	8368: Sindhi	8582: Urdu
7289: Armenian	6979: Esperanto	7384: Italian	7778: Mongolian	8373: Singhalese	8590: Uzbek
6583: Assamese	6984: Estonian	7465: Japanese	7865: Nauru	8375: Slovak	8673: Vietnamese
6588: Aymara	7079: Faroese	7487: Javanese	7869: Nepali	8376: Slovenian	8679: Volapük
6590: Azerbaijani	7074: Fiji	7578: Kannada	7879: Norwegian	8379: Somali	6789: Welsh
6665: Bashkir	7073: Finnish	7583: Kashmiri	7982: Oriya	6983: Spanish	8779: Wolof
6985: Basque	7082: French	7575: Kazakh	8083: Pashto, Pushto	8385: Sundanese	8872: Xhosa
6678: Bengali, Bangla	7089: Frisian	7589: Kirghiz	7065: Persian	8387: Swahili	7473: Yiddish
6890: Bhutani	7176: Galician	7579: Korean	8076: Polish	8386: Swedish	8979: Yoruba
6672: Bihari	7565: Georgian	7585: Kurdish	8084: Portuguese	8476: Tagalog	9085: Zulu
6682: Breton	6869: German	7665: Latin	8065: Punjabi	8471: Tajik	
6671: Bulgarian	6976: Greek	7686: Latvian, Lettish	8185: Quechua	8465: Tamil	
7789: Burmese	7576: Greenlandic	7678: Lingala	8277: Rhaeto-Romance	8484: Tatar	
6669: Byelorussian	7178: Guarani	7679: Laotian		8469: Telugu	
7577: Cambodian	7185: Gujarati	7684: Lithuanian	8279: Romanian	8472: Thai	
6765: Catalan	7265: Hausa	7775: Macedonian	8285: Russian	6679: Tibetan	
9072: Chinese	7387: Hebrew	7771: Malagasy	8377: Samoan	8473: Tigrinya	

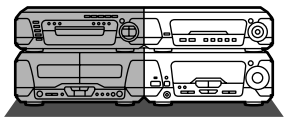

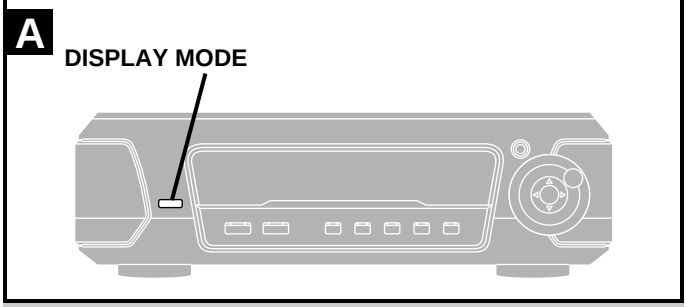

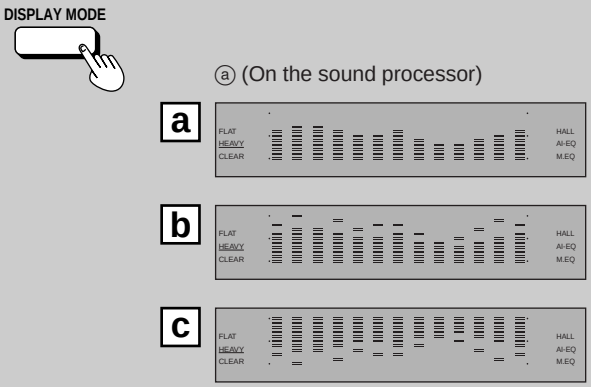

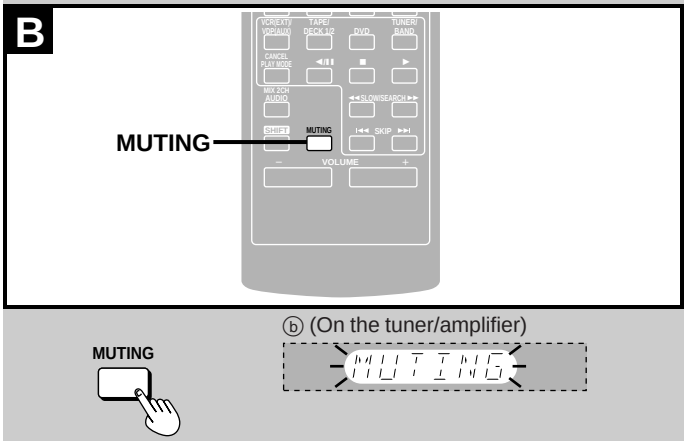

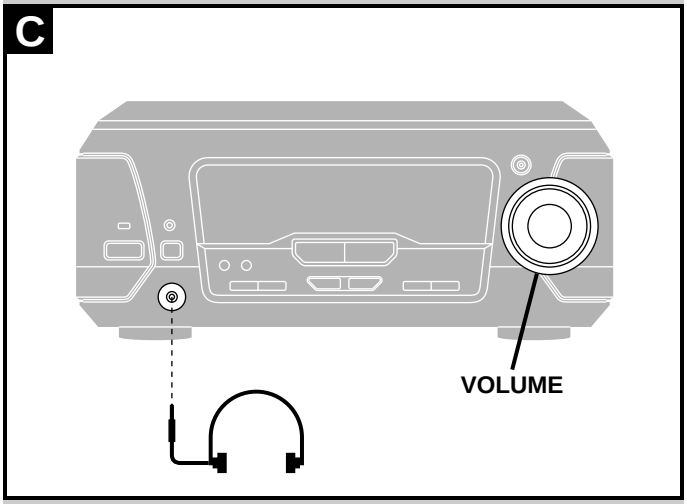

A Changing the sound range display

The sound processor shows the level of each sound range with the three types of displays described below.

Press [DISPLAY MODE].

Each time you press the button, the spectrum display will change as follows.

a **Normal display**
This display indicates the strength of the sound in each tonal range.

b **Peak-hold display**
The peak sound value of each sound range is held on the display for about one second after it occurs.

c **Aurora display**
The peak sound value of each sound range is displayed in inverted form.

B Muting the volume

Remote control only

Press [MUTING].

Volume is muted.

To cancel

Press [MUTING] again.
"MUTING" goes out and the volume is restored.
To cancel from the tuner/amplifier, turn [VOLUME] to the minimum (–– dB), then raise it to the required level.
Muting is also canceled when the unit is turned off.

C Using headphones (not included)

Reduce the volume before connection.

Avoid listening for prolonged periods of time to prevent hearing damage.
Plug type: 3.5 mm stereo

External unit connections

- Turn off all units before making connections.
- Refer to the manuals of the other units for details. (Cords and equipment not included.)

ⓕ **S-video cord (not included)**

ⓖ **Video cord**
(1 pc. included for the United Kingdom and Continental Europe
2 pcs. included for others)

ⓗ **Stereo phono cable (not included)**
ⓘ White **(L)**
ⓙ Red **(R)**

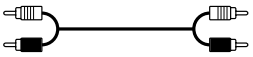

A

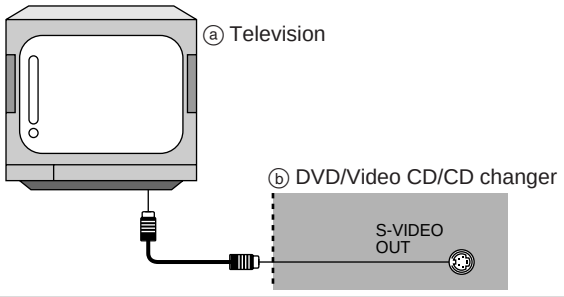

Television with S-VIDEO terminal

The S-VIDEO output terminal achieves a more vivid picture than the video output terminal by separating the colour and luminance signals before transmitting them to the television. (Actual results depend on the television.)

B

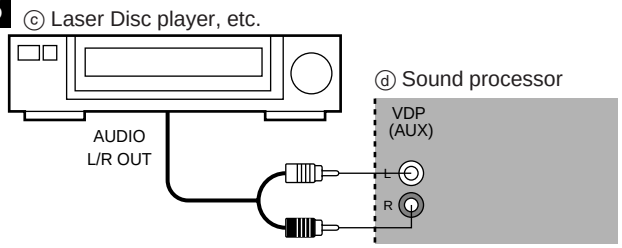

Laser Disc player (without 5.1ch output), etc.

This unit has Dolby Pro Logic circuitry. The sound will be reproduced with the same powerful stereophonic effects found in movie theaters.

C

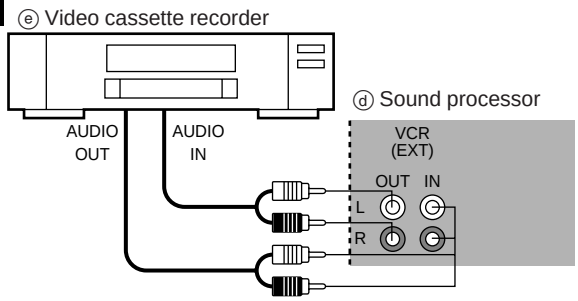

Video cassette recorder

You can play the sound from a video cassette recorder through this unit's speakers or record sound from this unit onto a video cassette.

D

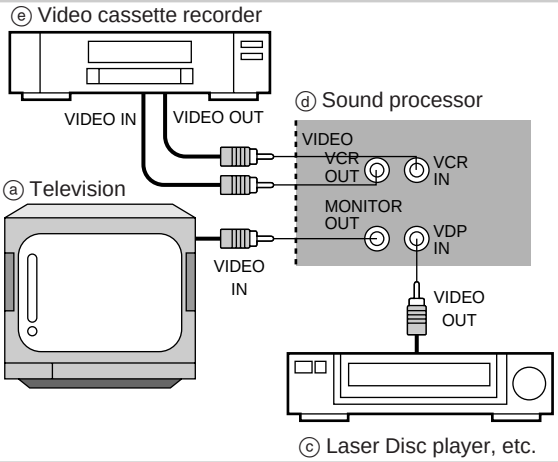

Televison

(Except for the United Kingdom and Continental Europe)
By connecting a video cord as shown along with the audio connections shown in **B** and **C**, you are able to control the video and audio with [INPUT SELECTOR].

E

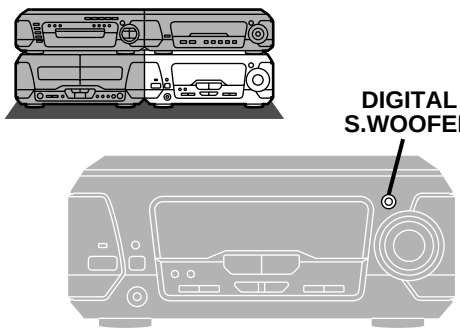

Subwoofer

For the United Kingdom, Continental Europe, Australia and N.Z.
The included front speakers have subwoofers, but you can enhance the sound by connecting an optional subwoofer to SUBWOOFER OUT on the back of the sound processor.

E If you connect a subwoofer:
Press and hold [DIGITAL S.WOOFER] on the main unit until "SUB W ON" is displayed.
Sound will not come from the subwoofer if there is no specific channel for the low frequency effect on DVD.

For others
Connect the included subwoofer (➡ page 6 for connection).
(You do not have to press [DIGITAL S.WOOFER] to turn the SUBWOOFER on.)

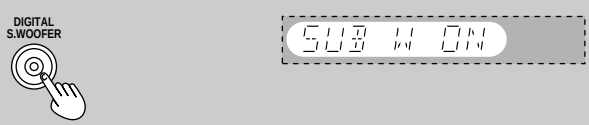

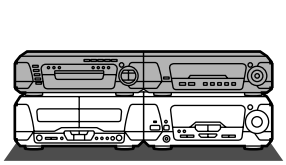

A

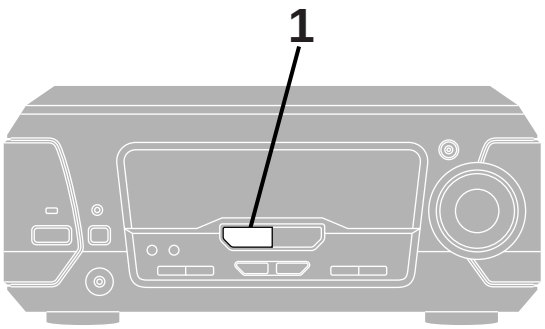

1

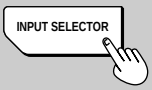

B

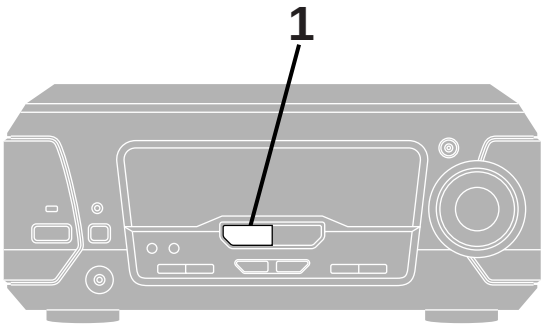

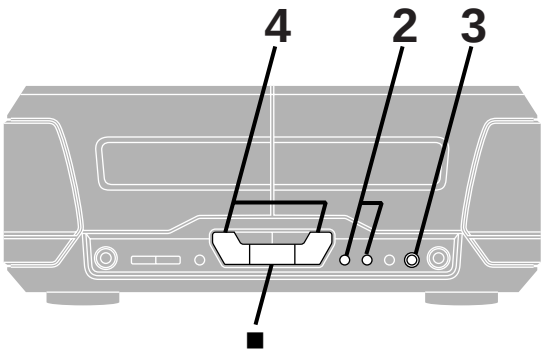

1

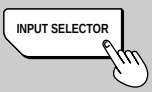

2

3

4

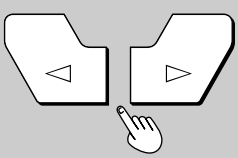

Using other equipment

A Listening to an external source

1 Press [INPUT SELECTOR] to select the external source.

Each time you press the button:
TUNER→DVD→TAPE→**VCR (EXT)**→**VDP (AUX)**
↑_____↓

On the remote control
Press [VCR (EXT)/VDP (AUX)].

2 Operate the unit.

See the unit's manual for details on connection and operation.

B Recording an external source

1 Press [INPUT SELECTOR] to select the external source.

2 Select Dolby NR and reverse mode.

(➡ page 37)

3 Press [● REC PAUSE].

4 Press [◁] or [▷] to start recording.

5 Start the source to be recorded.

See the unit's manual for details on connection and operation.

To stop recording
Press [■] on the deck.

To pause recording
Press [● REC PAUSE].
The deck goes into recording standby mode.
To resume recording press the flashing [◁] or [▷].

Recording onto an external unit

① Press [INPUT SELECTOR] to select the source to be recorded.
② Start recording on the external unit and start playing the source to be recorded.

Technical specifications

SOUND PROCESSOR

■ EQ/SFP section

MANUAL GEQ

3-Band parametric EQ

Center frequency

High band 3.5 kHz, 5.3 kHz, 8 kHz, 12.5 kHz

Mid band 240 Hz, 390 Hz, 630 Hz, 1 kHz, 1.5 kHz, 2.3 kHz, 3.5 kHz

Low band 70 Hz, 90 Hz, 143 Hz, 240 Hz

Level control ±1.2, 2.4, 3.6, 4.8, 6 dB

EQ SPACE mode

3 modes HEAVY, CLEAR, HALL

3D acoustic image EQ

3 modes AI EQ, 3D AI 1, 3D AI 2

■ Pre-amplifier section

Input sensitivity/impedance

VCR (EXT) 250 mV/15 kΩ

VDP (AUX) 250 mV/15 kΩ

Output level

VCR REC OUT 150 mV/1.5 kΩ

(Except for the United Kingdom and Continental Europe)

VIDEO OUTPUT

MONITOR OUT 1 Vp-p, 75 Ω

VCR REC OUT 1 Vp-p, 75 Ω

■ DOLBY PRO LOGIC section

PRO LOGIC mode SURROUND

CENTER mode NORMAL

DELAY TIME 20 ms (Fixed)

■ AV SURROUND section

AV surround mode SIMULATED STEREO, SUPER SURROUND (MUSIC, MOVIE)

■ DSP CONTROL section

DSP control mode SEAT POSITION, CENTER FOCUS (1, 2), VIRTUAL REAR SURROUND, MULTI REAR SURROUND, 3D ENHANCED SURROUND

■ Spectrum analyzer section

Display mode NORMAL, PEAKHOLD, AURORA

■ General

Dimensions (W×H×D) 293×89×270 mm

Mass 1.5 kg

TUNER/AMPLIFIER

■ Amplifier section

Power output (L/R both channel driven)

(For the United Kingdom, Continental Europe, Australia and N.Z.)

Stereo Mode

DIN **10 kHz THD 1 %/6 Ω (High)** 2×20 W

1 kHz THD 1 %/6 Ω (Mid) 2×20 W

100 Hz THD 1 %/8 Ω (Low) 2×45 W

RMS **10 kHz THD 10 %/6 Ω (High)** 2×30 W

1 kHz THD 10 %/6 Ω (Mid) 2×30 W

100 Hz THD 10 %/8 Ω (Low) 2×65 W

PRO LOGIC mode

DIN

FRONT 1 kHz THD 1 %/TTL Imp. 6 Ω (High/Mid) 2×20 W

100 Hz THD 1 %/8 Ω (Low) 2×45 W

SURROUND 1 kHz THD 1 %/8 Ω 2×20 W

CENTER 1 kHz THD 1 %/8 Ω 60 W

RMS

FRONT 1 kHz THD 10 %/TTL Imp. 6 Ω (High/Mid) 2×30 W

100 Hz THD 10 %/8 Ω (Low) 2×65 W

SURROUND 1 kHz THD 10 %/8 Ω 2×30 W

CENTER 1 kHz THD 10 %/8 Ω 80 W

PMPO 1 kHz/High or Mid 6 Ω, Low 8 Ω, CENT. 8 Ω, SURR. 8 Ω 3,000 W

(For others)

Stereo Mode

DIN **10 kHz THD 1 %/6 Ω (High)** 2×20 W

1 kHz THD 1 %/6 Ω (Mid) 2×20 W

100 Hz THD 1 %/8 Ω (Low) 2×45 W

100 Hz THD 1 %/8 Ω (Sub. W) 60 W

RMS **10 kHz THD 10 %/6 Ω (High)** 2×30 W

1 kHz THD 10 %/6 Ω (Mid) 2×30 W

100 Hz THD 10 %/8 Ω (Low) 2×65 W

100 Hz THD 10 %/8 Ω (Sub. W) 80 W

PRO LOGIC mode

DIN

FRONT 1 kHz THD 1 %/TTL Imp. 6 Ω (High/Mid/Low) 2×20 W

100 Hz THD 1 %/8 Ω (Sub. W) 65 W

SURROUND 1 kHz THD 1 %/8 Ω 2×20 W

CENTER 1 kHz THD 1 %/8 Ω 60 W

RMS

FRONT 1 kHz THD 10 %/TTL Imp. 6 Ω (High/Mid/Low) 2×34 W

100 Hz THD 10 %/8 Ω (Sub. W) 96 W

SURROUND 1 kHz THD 10 %/8 Ω 2×34 W

CENTER 1 kHz THD 10 %/8 Ω 88 W

PMPO 1 kHz/High or Mid 6 Ω, Low or Sub. W 8 Ω 3,000 W

Total harmonic distortion

Rated power at 1 kHz 1 % (6 Ω)

Half power at 1 kHz 0.1 % (6 Ω)

Load impedance

(For the United Kingdom, Continental Europe, Australia and N.Z.)

FRONT (High/Mid) total impedance 6 Ω

(Low) 8 Ω

(For others)

FRONT (High/Mid/Low) total impedance 6 Ω

(Sub. W) 8 Ω

SURROUND 8 Ω

CENTER 8 Ω

S. WOOFER

Center frequency 70 Hz

LEVEL (VOL −20 dB) MID +8 dB, MAX +12 dB

■ FM tuner section

Frequency range 87.50–108.00 MHz (0.05 MHz steps)

Sensitivity 1.8 µV (IHF usable)

S/N 26 dB 1.5 µV

S/N

MONO 70 dB (75 dB, IHF)

Antenna terminal(s) 75 Ω (unbalanced)

■ AM tuner section

Frequency range 522–1629 kHz (9 kHz steps), 520–1630 kHz (10 kHz steps)

Sensitivity (S/N 20 dB) 500 µV/m

■ Timer section

Clock Quartz-lock type

Function Play timer (1 time, daily), Rec timer (1 time, daily), Sleep (120 min, 30 min intervals)

Setting intervals (Play/Rec)

1 minute–23 hours 59 minutes (1 min intervals)

■ General

Power supply

(For the United Kingdom, Australia and N.Z.) AC 230–240 V 50 Hz

(For Continental Europe and Russia) AC 230 V 50 Hz

(For others) AC 110/127/220–230/240 V, 50/60 Hz

Power consumption 230 W

Standby

Normal mode 11 W

ECO mode

(For the United Kingdom, Continental Europe, Russia, Australia and N.Z.) 0.5 W

(For others) 1.0 W

Dimensions (W×H×D) 293×118.5×346 mm

Mass

(For the United Kingdom, Continental Europe, Russia, Australia and N.Z.) 5.3 kg

(For others) 5.4 kg

DVD/VIDEO CD/CD CHANGER

■ Discs played

DVD-Video disc 8/12 cm single-sided, single-layer, 8/12 cm single-sided, double-layer, 8/12 cm double-sided, double-layer (One layer per side)

Compact disc (CD-DA, Video CD) 8/12 cm disc

■ Video

Signal system

(For Russia) NTSC/PAL (decided by disc format)

(For others) PAL (PAL 60/NTSC)

Output level

Composite video 1 Vp-p (75 Ω)

S-video Y 1 Vp-p (75 Ω)

S-video C 0.300 Vp-p (75 Ω) PAL, 0.286 Vp-p (75 Ω) NTSC

■ Pickup

Beam source Semiconductor laser

Wavelength 668 nm

■ General

Dimensions (W×H×D) 293×89×288 mm

Mass 2.5 kg

CASSETTE DECK

Deck system Stereo cassette deck

Track system 4 track, 2 channel

Recording system AC bias

Bias frequency 100 kHz

Erasing system AC erase

Heads

Deck 1 (Playback head) Permalloy head

Deck 2

(Recording/Playback head) Permalloy head

(Erasing head) Double gap ferrite head

Motors

Deck 1, 2 Capstan drive DC servo motor

Tape speed 4.8 cm/s

Wow and flutter 0.16 % (WRMS)

Fast forward and rewind times

Approx. 110 seconds with C-60 cassette tape

Frequency response (Dolby NR off)

TYPE I (NORMAL) 20 Hz–16 kHz (DIN)

TYPE II (HIGH) 20 Hz–16 kHz (DIN)

TYPE IV (METAL) 20 Hz–16 kHz (DIN)

S/N (Signal level=max recording level, TYPE II type tape)

NR off 56 dB (A weighted)

Dolby B NR on 66 dB (A weighted)

Input sensitivity and impedance

REC (IN) 150 mV/23 kΩ

Output voltage and impedance

PLAY (OUT) 280 mV/360 Ω

■ General

Dimensions (W×H×D) 294×118.5×281 mm

Mass 2.1 kg

FRONT SPEAKER

Type 3 way, 3 speakers

Speaker(s)

Super woofer 17 cm cone type

Woofer 12 cm cone type

Tweeter 6 cm ring shaped dome type

Impedance High 6 Ω, Mid 6 Ω, Low 8 Ω

Input power (Music) High 60 W, Mid 60 W, Low 120 W

Output sound pressure level 87 dB/W (1.0 m)

Crossover frequency 120 Hz, 4 kHz

Frequency range 42 Hz–50 kHz (−16 dB), 46 Hz–36 kHz (−10 dB)

■ General

Dimensions (W×H×D) 254×422×260 mm

Mass 6.4 kg

CENTER SPEAKER

Type 2 way, 2 speakers

Speaker

Woofer 10 cm cone type

Tweeter 6 cm cone type

Impedance 8 Ω

Input power (Music) 120 W

Output sound pressure level 85 dB/W (1.0 m)

Crossover frequency 4 kHz

Frequency range 75 Hz–22 kHz (−16 dB)

■ General

Dimensions (W×H×D) 250×121×147 mm

Mass 1.6 kg

SURROUND SPEAKER

Type 1 way, 1 speaker

Speaker

Full range 8 cm cone type

Impedance 8 Ω

Input power (Music) 60 W

Output sound pressure level 84 dB/W (1.0 m)

Frequency range 120 Hz–20 kHz (−16 dB)

■ General

Dimensions (W×H×D) 170×106×118 mm

Mass 0.9 kg

SUBWOOFER

(Except for the United Kingdom, Continental Europe, Australia and N.Z.)

Type 1 way, 1 speaker, Bass-ref.

Speaker

Woofer 17 cm cone type

Impedance 8 Ω

Input power

Music 180 W

DIN 90 W

Output sound pressure level 80 dB/W (1.0 m)

Frequency range 41 Hz–1.8 kHz (−16 dB), 45 Hz–1.6 kHz (−10 dB)

■ General

Dimensions (W×H×D) 200×450×300 mm

Mass 5.9 kg

Note

1. Specifications are subject to change without notice. Mass and dimensions are approximate.
2. Total harmonic distortion is measured by the digital spectrum analyzer.

Troubleshooting guide

Before requesting service, make the below checks. If you can't fix the system as described below, or if something not listed here occurs, refer to the enclosed directory to locate an Authorized Service Center convenient to you or contact your dealer.

Reference pages are shown as black circled numbers ❻.

Common Problems

No sound.	Turn the volume up. The speaker cords may be shorted. Turn the unit off, check and correct the connections and turn the unit on. ❻
Sounds unfixed, reversed or come from one speaker only.	Check the speaker connections. ❻
Humming heard during play.	An AC mains lead or fluorescent light is near the cables. Keep other appliances and leads away from this unit's cables. If possible in your area, turn the AC mains lead's plug or connector over to reverse the plug's polarity.
"ERROR" displayed.	Incorrect operation performed. Read the instructions and try again.
"––:––" appears on display.	You plugged the AC mains lead in for the first time or there was a power failure recently. Set the time. ⓬
"U70" displayed.	Connect the flat cables firmly. If "U70" remains on the display, contact the dealer.
"F61" displayed.	There is a problem with the tuner/amplifier. Contact the dealer.
ECO mode on but display still lights up in standby mode.	Turn DEMO off. ⓬
"DTS NO AUDIO" displayed.	This unit is unable to decode DTS signals.
"DVD U11" displayed.	The disc is dirty. Wipe it with a soft cloth.
"DVD H □□" displayed. (□□ will be numbers.)	A problem has occurred. Turn the unit off and unplug the AC mains lead. Wait a moment and then plug the lead in and turn on the unit again. If the unit is still not working correctly, consult your dealer.
Initial settings menu cannot be accessed.	Select DVD as the source. ㊺ Cancel ALL DISC, program and random play. ⓯ ⓴ ㉑

Listening to the radio

Noise heard. Stereo indicator flickers or doesn't light. Sound distorted.	Use an outdoor antenna. ❼
A beat sound heard.	Turn the television off or separate it from the unit.
A low hum heard during AM broadcasts.	Separate the antenna from other cables and leads.
Correct AM frequency can't tune in.	**For the United Kingdom, Continental Europe, Russia, Australia and N.Z.** Change the frequency step. Hold [TUNER/BAND] down for 10 seconds to change the step to 9 kHz. **For others** Change to the correct frequency step. ㉔

Listening to tapes

Poor quality sound.	Clean the heads. ㊺ Check the Dolby NR setting. ㉖
Recording not possible.	If the erasure prevention tabs have been removed, cover the holes with adhesive tape. ㊱

Enjoying discs

Display is wrong or play won't start.	The disc may be upside down. ⓮ Wipe the disc. Replace the disc if it is scratched, warped, or nonstandard. Condensation may have formed inside the changer due to a sudden change in temperature. Wait about an hour for it to clear and try again.
"TAKE OUT/DISC" appears on display.	There is a problem with the disc mechanism. (A power failure may have occurred.) The tray will open automatically. Remove the disc from the tray, and close it after ensuring there is no disc in the tray. The unit will make disc changing noises for a few moments and then it should operate normally.
Picture does not appear on TV screen when playing DVD.	The region number of the disc doesn't match the region number of this unit. ⓭ Connect the video cord. ❻ Set the television to video input mode.
Picture does not appear on TV screen when playing Video CD.	Connect the video cord. ❻ Set the television to video input mode.
ALL DISC, program and random play cannot be used.	Ensure a Video CD or CD is in the play position tray.
Picture on TV screen disappears or stripes appear on screen.	The location and orientation of the antenna are incorrect. If you are using an indoor antenna, change to an outdoor antenna. The television antenna wire is too close to the system. Separate the antenna wire of the television from the system.
You have forgotten your ratings password. (Reset all the settings to Factory Preset)	Reset the unit to its original factory settings by doing the following procedure. When "DVD" is selected as a source, press [■] on the changer and [≥**10**] on the remote control at the same time for about 3 seconds until the message "Initialized" disappears from the television screen.

During one touch disc editing (➡page 38)

"DECK NO TAPE" displayed.	Load a cassette into deck 2. ㊲
"DECK CHANGE TAPE" displayed.	If the erasure prevention tabs have been removed, cover the holes with adhesive tape. ㊱

Remote control

Remote control doesn't work.	Check the batteries are inserted correctly. ⓫ Replace the batteries if they are worn.

All components are required to service the system. If service is ever necessary, bring the entire system.

Maintenance

If the surfaces are dirty

To clean this unit, wipe with a soft, dry cloth.
If the surfaces are extremely dirty, use a soft cloth dipped in a soap-and-water solution or a weak detergent solution.

- Never use alcohol, paint thinner or benzine to clean this unit.
- Before using chemically treated cloth, read the instructions that came with the cloth carefully.

For a cleaner crisper sound

Clean the heads regularly to assure good quality playback and recording. Use a cleaning tape (not included).

This product incorporates copyright protection technology that is protected by method claims of certain U.S. patents and other intellectual property rights owned by Macrovision Corporation and other rights owners. Use of this copyright protection technology must be authorized by Macrovision Corporation, and is intended for home and other limited viewing uses only unless otherwise authorized by Macrovision Corporation. Reverse engineering or disassembly is prohibited.

Matsushita Electric Industrial Co., Ltd.
Osaka 542-8588, Japan

En

RQT5471-B
F0300MF0