Panasonic®

Operating Instructions
OLED TV

English

Model No.

TX-55FZ952B
TX-65FZ952B

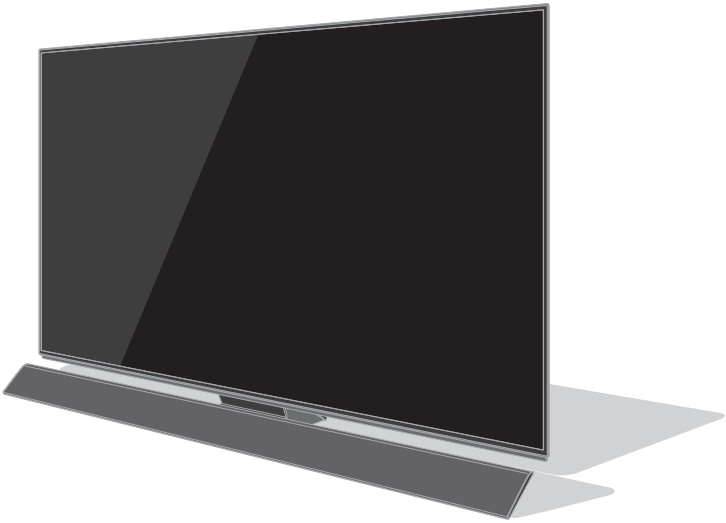

(image: TX-65FZ952B)

eHELP

For more detailed instructions, please refer to [eHELP] (Built-in Operating Instructions).

- How to use [eHELP] ➡ **(p. 30)**

Thank you for purchasing this Panasonic product.

Please read these instructions carefully before operating this product and retain them for future reference.

Please carefully read the “Safety Precautions” of this manual before use.

The images shown in this manual are for illustrative purposes only.

TQB0E2809U

M0318-0

English

Contents

Be Sure to Read

Important Notice ····· 4
Safety Precautions ····· 5

Accessories ····· 9
Installing the TV ····· 10
Installing the wall-hanging bracket ····· 15
Connections ····· 20
Identifying Controls ····· 26
First time Auto Setup ····· 29
Watching TV ····· 30
How to Use eHELP ····· 30
FAQs ····· 32
Maintenance ····· 33
Specifications ····· 34

“PlayReady” is a trademark registered by Microsoft. Please be aware of the following.

(a) This product contains technology subject to certain intellectual property rights of Microsoft. Use or distribution of this technology outside of this product is prohibited without the appropriate license(s) from Microsoft.

(b) Content owners use Microsoft PlayReady™ content access technology to protect their intellectual property, including copyrighted content. This device uses PlayReady technology to access PlayReady-protected content and/or WMDRM-protected content. If the device fails to properly enforce restrictions on content usage, content owners may require Microsoft to revoke the device’s ability to consume PlayReady-protected content. Revocation should not affect unprotected content or content protected by other content access technologies.

Content owners may require you to upgrade PlayReady to access their content.

If you decline an upgrade, you will not be able to access content that requires the upgrade.

DLNA®, the DLNA Logo and DLNA CERTIFIED™ are trademarks, service marks, or certification marks of the Digital Living Network Alliance.

The terms HDMI and HDMI High-Definition Multimedia Interface, and the HDMI Logo are trademarks or registered trademarks of HDMI Licensing Administrator, Inc. in the United States and other countries.

HDAVI Control™ is a trademark of Panasonic Corporation.

Manufactured under license from Dolby Laboratories.

Dolby, Dolby Audio, and the double-D symbol are trademarks of Dolby Laboratories.

Speech Powered by Dragon

2002-2018 Nuance Communications, Inc. All rights reserved.

SDXC Logo is a trademark of SD-3C, LLC.

The Bluetooth® word mark and logos are registered trademarks owned by Bluetooth SIG, Inc. and any use of such marks by Panasonic Corporation is under license. Other trademarks and trade names are those of their respective owners.

“AVCHD” and “AVCHD Progressive” are trademarks of Panasonic Corporation and Sony Corporation.

DVB and the DVB logos are trademarks of the DVB Project.

---

x.v.Colour™ is a trademark.

“freesat” is a registered trademark and the “freesat” logo is a trademark of Freesat (UK) Ltd.

- For information about the trademarks, refer to [eHELP] (Search by Purpose > Read first > Before use > Licence).

The illustration for TX-65FZ952B is used in this manual unless otherwise mentioned.

Illustrations shown may be different depending on the model.

Important Notice

Do not display any still part of the image for a long period

In such cases the still part of the image remains dimly on the screen ("image retention"). This is not considered a malfunction and is not covered by the warranty.

- Typical still image parts:
  - Still images shown continuously on the same area (ex. channel number, channel logo, other logos or title image, etc.)
  - Still or moving pictures viewed in 4:3 or 14:9 aspect ratio, etc.
  - Video games

- To avoid image retention, the screen saver may be activated (OLED logo moves) or the on-screen message may move after a few minutes if no signals are sent or no operations are performed.
- To avoid image retention, the screen may become dim when the motionless image is displayed. This is not a malfunction. The brightness of the screen returns to the previous level when the active image is displayed.
- Be sure to turn the TV off with the remote control to perform the panel maintenance. During the panel maintenance, LED turns to orange. (p. 28) The maintenance works as necessary.
- Set aspect ratio to [4:3 full] for 4:3 image. For details, refer to [eHELP] (Search by Purpose > Watching > For best picture).
- For more information
  ➡ **"Panel maintenance" (p. 28)**

Notice for DVB / Data broadcasting / IPTV functions

This TV is designed to meet the standards (as of August, 2017) of digital services.

- Not all the features are available depending on the country, area, broadcaster, service provider and network environment.
- Compatibility with future services is not guaranteed.

Internet apps are provided by their respective service providers, and may be changed, interrupted, or discontinued at any time.

Panasonic assumes no responsibility and makes no warranty for the availability or the continuity of the services.

Panasonic does not guarantee operation and performance of peripheral devices made by other manufacturers; and we disclaim any liability or damage arising from operation and/or performance from usage of such other maker's peripheral devices.

Handling of customer information

When using Internet connecting function of this TV, after agreeing to Panasonic's terms of service / privacy policy (hereinafter referred to as terms and conditions etc.), Customer Information on the use of this unit may be collected and used according to terms and conditions etc.

For details of terms of service / privacy policy, refer to [eHELP] (Search by Purpose > Network > Network settings > Terms of Service and Settings)

Customer's personal information may be recorded on this TV by broadcasting organization or application provider. Before repairing, transferring or discarding this TV, erase all the information recorded on this TV according to the following procedure.

[eHELP] (Search by Purpose > Functions > Shipping Condition)

Customer Information may be collected by provider via application provided by third parties on this TV or website. Please confirm the terms and conditions etc. of provider in advance.

- Panasonic will not be held responsible for collecting or using customer Information via application provided by third party on this TV or website.
- When entering your credit card number, name, etc., pay special attention to the trustworthiness of the provider.
- Registered information may be registered in the server etc. of provider. Before repairing, transferring or discarding this TV, be sure to erase the information according to the terms and conditions etc. of provider.

The recording and playback of content on this or any other device may require permission from the owner of the copyright or other such rights in that content. Panasonic has no authority to and does not grant you that permission and explicitly disclaims any right, ability or intention to obtain such permission on your behalf. It is your responsibility to ensure that your use of this or any other device complies with applicable copyright legislation in your country. Please refer to that legislation for more information on the relevant laws and regulations involved or contact the owner of the rights in the content you wish to record or playback.

This product is licensed under the AVC patent portfolio license for the personal and non-commercial use of a consumer to (i) encode video in compliance with the AVC Standard ("AVC Video") and/or (ii) decode AVC Video that was encoded by a consumer engaged in a personal and non-commercial activity and/or was obtained from a video provider licensed to provide AVC Video. No license is granted or shall be implied for any other use.

Additional information may be obtained from MPEG LA, LLC.

See http://www.mpegla.com.

This mark indicates the product operates on AC voltage.

This mark indicates a Class II or double insulated electrical appliance wherein the product does not require a safety connection to electrical earth (ground).

Transport only in upright position.

Safety Precautions

To help avoid risk of electrical shock, fire, damage or injury, please follow the warnings and cautions below:

■ Mains plug and lead

Warning

If you detect anything unusual, immediately switch off the mains supply switch and remove the mains plug.

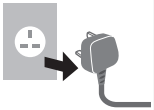

IMPORTANT:
THE MOULDED MAINS PLUG
FOR YOUR SAFETY, PLEASE READ THE FOLLOWING TEXT CAREFULLY.

This TV is supplied with a moulded 3-pin mains plug for your safety and convenience.

A 10 amp fuse is fitted in this mains plug. Shall the fuse need to be replaced, please ensure that the replacement fuse has a 10 amp rating and that it is approved by ASTA or BSI to BS1362.

Check for the ASTA mark or the BSI mark on the fuse body.

If the mains plug contains a removable fuse cover, you must ensure that it is refitted when the fuse is replaced.

If you lose the fuse cover, the mains plug must not be used until a replacement cover is obtained.

A replacement fuse cover may be purchased from your local dealer.
Do not cut off the mains plug.

Do not use any other type of mains lead except the one supplied with this TV.

The supplied mains lead and moulded plug are designed to be used with this TV to avoid interference and for your safety.

If the mains socket in your home is not suitable, get it changed by a qualified electrician.

If the plug or mains lead becomes damaged, purchase a replacement from an authorised dealer.

How to replace the fuse:

For plug type shown in example 1

Lift out the removable fuse cover with a screwdriver and replace the fuse, then refit it securely into the mains plug.

For plug type shown in example 2

Lift open the fuse cover in the mains plug with a screwdriver and replace the fuse, then press the fuse cover down securely.

Example 1

Example 2

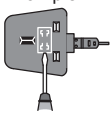

- This TV is designed to operate on AC ∼ 220-240 V, 50 / 60 Hz.

- Insert the mains plug fully into the mains socket.
- To turn Off the apparatus completely, you must pull the mains plug out of the mains socket.

  Consequently, the mains plug should be easily accessible at all times.
- Disconnect the mains plug when cleaning the TV.
- Do not touch the mains plug with wet hands.

- Do not damage the mains lead.
  - Do not place a heavy object on the lead.

  - Do not place the lead near a high temperature object.

  - Do not pull on the lead. Hold onto the mains plug body when disconnecting the plug.

  - Do not move the TV with the lead plugged into a mains socket.
  - Do not twist the lead, bend it excessively or stretch it.
  - Do not use a damaged mains plug or mains socket.
  - Ensure the TV does not crush the mains lead.

■ Take care

Warning

- Do not remove covers and never modify the TV yourself as live parts are accessible and risk of electric shock when they are removed. There are no user serviceable parts inside.

- Do not expose the TV to rain or excessive moisture. This TV must not be exposed to dripping or splashing water and objects filled with liquid, such as vases, must not be placed on top of or above the TV.

- Do not insert foreign objects into the TV through the air vents.
- If the TV is used in an area where insects may easily enter the TV.

  It is possible for insects to enter the TV, such as small flies, spiders, ants, etc. which may cause damage to the TV or become trapped in an area visible on the TV, e.g. within the screen.
- If the TV is used in an environment where there is dust or smoke.

  It is possible for dust/smoke particles to enter the TV through the air vents during normal operation which can become trapped inside the unit. This may cause overheating, malfunction, deterioration in picture quality, etc.
- Do not use an unapproved pedestal / mounting equipment. Be sure to ask your local Panasonic dealer to perform the setup or installation of approved wall-hanging brackets.
- Do not apply any strong force or impact to the display panel.
- Ensure that children do not climb on the TV.
- Do not place the TV on sloping or unstable surfaces, and ensure that the TV does not hang over the edge of the base.

Warning

Never place a TV in an unstable location. A TV may fall, causing serious personal injury or death. Many injuries, particularly to children, can be avoided by taking simple precautions such as:

- Using cabinets or stands recommended by the manufacturer of the TV.
- Only using furniture that can safely support the TV.
- Ensuring the TV is not overhanging the edge of the supporting furniture.
- Not placing the TV on tall furniture (for example, cupboards or bookcases) without anchoring both the furniture and the TV to a suitable support.
- Not placing the TV on cloth or other materials that may be located between the TV and supporting furniture.
- Educating children about the dangers of climbing on furniture to reach the TV or its controls.

If your existing TV is being retained and relocated, the same considerations as above should be applied.

- This TV is designed for table-top use.
- Do not expose the TV to direct sunlight and other sources of heat.

To prevent the spread of fire, keep candles or other open flames away from this product at all times

■ Suffocation / Choking Hazard

Warning

- The packaging of this product may cause suffocation, and some of the parts are small and may present a choking hazard to young children. Keep these parts out of reach of young children.
- Do not allow children to handle any small objects such as SD Card. The small object could be swallowed by young children. Remove SD Card immediately after use and store out of reach of young children.

■ Pedestal

Warning

- Do not disassemble or modify the pedestal.

Caution

- Do not use any pedestal other than the one provided with this TV.
- Do not use the pedestal if it becomes warped or physically damaged. If this occurs, contact your nearest Panasonic dealer immediately.
- During setup, make sure that all screws are securely tightened.
- Ensure that the TV does not suffer any impact during installation of the pedestal.
- Ensure that children do not climb onto the pedestal.
- Install or remove the TV from the pedestal with at least two people.
- Install or remove the TV according to the specified procedure.

■ Radio waves

Warning

- Do not use the TV and Touch Pad Controller in any medical institutions or locations with medical equipment. Radio waves may interfere with the medical equipment and may cause accidents due to malfunction.
- Do not use the TV and Touch Pad Controller near any automatic control equipment such as automatic doors or fire alarms. Radio waves may interfere with the automatic control equipment and may cause accidents due to malfunction.
- Keep at least 15 cm away from the TV and Touch Pad Controller if you have a cardiac pacemaker. Radio waves may interfere with the operation of the pacemaker.
- Do not disassemble or alter the TV and Touch Pad Controller in any way.

■ Built-in wireless LAN

Caution

- Do not use the built-in wireless LAN to connect to any wireless network (SSID*) for which you do not have usage rights. Such networks may be listed as a result of searches. However, using them may be regarded as illegal access.

  *SSID is a name for identifying a particular wireless network for transmission.
- Do not subject the built-in wireless LAN to high temperatures, direct sunlight or moisture.
- Data transmitted and received over radio waves may be intercepted and monitored.
- The built-in wireless LAN uses 2.4 GHz and 5 GHz frequency bands. To avoid malfunctions or slow response caused by radio wave interference when using the built-in wireless LAN, keep the TV away from other devices that use 2.4 GHz and 5 GHz signals such as other wireless LAN devices, microwave ovens, and mobile phones.
- When problems occur due to static electricity, etc., the TV might stop operating to protect itself. In this case, turn the TV off at the Mains power On / Off switch, then turn it back on.

■ Bluetooth® wireless technology

Caution

- The TV and Touch Pad Controller use the 2.4 GHz radio frequency ISM band (Bluetooth®). To avoid malfunctions or slow response caused by radio wave interference, keep the TV and Touch Pad Controller away from the devices such as other wireless LAN devices, other Bluetooth devices, microwaves, mobile phones and the devices that use 2.4 GHz signal.

■ Ventilation

Caution

Allow sufficient space (at least 10 cm) around the TV in order to help prevent excessive heat, which could lead to early failure of some electronic components.

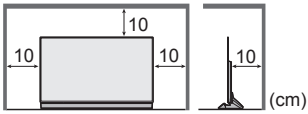

- Ventilation should not be impeded by covering the ventilation openings with items such as newspapers, tablecloths and curtains.

- Whether you are using a pedestal or not, always ensure the vents at the bottom of the TV are not blocked and there is sufficient space to enable adequate ventilation.

■ Moving the TV / speaker

Caution

Before moving the TV, disconnect all cables and remove the speaker from the pedestal.

- At least two people are required to move the TV to prevent injury that may be caused by the tipping or falling of TV.
- Do not hold the screen part as shown below when moving the TV. This may cause malfunction or damage.

  How to carry the TV. ➡ **(p. 11)**

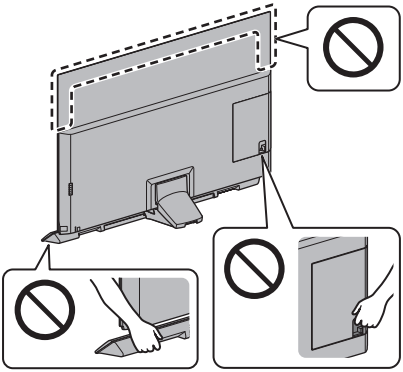

- Transport only in upright position. Transporting the TV with its display panel facing upwards or downwards may cause damage to the internal circuitry.
- Do not hold the speaker in one hand.
- Do not hold the speaker net part.

  Support the speaker as shown below to prevent injury that may be caused by the falling of the speaker.
- Be careful not to nip the fingers between the speaker and pedestal when installing the speaker to the pedestal.

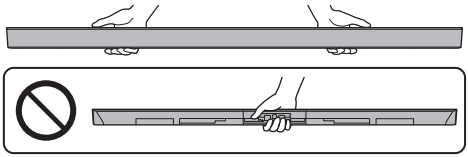

■ When not in use for a long time

Caution

This TV will still consume some power even in the Off mode, as long as the mains plug is still connected to a live mains socket.

- Remove the mains plug from the wall socket when the TV is not in use for a prolonged period of time.

■ Excessive volume

Caution

- Do not expose your ears to excessive volume from the headphones. Irreversible damage can be caused.

- If you hear a drumming noise in your ears, turn down the volume or temporarily stop using the headphones.

■ Battery for the Remote Control / Touch Pad Controller

Caution

- Incorrect installation may cause battery leakage, corrosion and explosion.
- Replace only with the same or equivalent type.
- Do not mix old and new batteries.
- Do not mix different battery types (such as alkaline and manganese batteries).
- Do not use rechargeable batteries (Ni-Cd, etc.).
- Do not burn or break up batteries.
- Do not expose batteries to excessive heat such as sunshine, fire or the like.
- Make sure you dispose of batteries correctly.
- Remove the battery from the unit when not using for a prolonged period of time to prevent battery leakage, corrosion and explosion.

■ Magnetic influence

Caution

- Keep magnet field sensitive objects, such as a cardiac pacemaker, magnetic / IC card, etc. away from speaker / cover. Otherwise, malfunction or data loss may occur.

OLED TV

Declaration of Conformity (DoC)

“Hereby, Panasonic Corporation declares that this TV is in compliance with the essential requirements and other relevant provisions of the Directive 2014/53/EU.”

If you want to get a copy of the original DoC of this TV, please visit the following website:

http://www.ptc.panasonic.eu/doc

Authorized Representative:

Panasonic Testing Centre

Panasonic Marketing Europe GmbH

Winsbergring 15, D-22525 Hamburg, Germany

5.15 – 5.35 GHz band of wireless LAN is restricted to indoor operation only in the following countries.

Ireland, United Kingdom

Maximum radio-frequency power transmitted in the frequency bands

Type of wireless	Frequency band	Maximum EIRP
Wireless LAN	2 412-2 472 MHz	20 dBm
	5 150-5 250 MHz	23 dBm
	5 250-5 350 MHz	23 dBm
	5 470-5 725 MHz	23 dBm
Bluetooth	2 402-2 480 MHz	9.94 dBm

Accessories

Standard accessories

Remote Control

➡ **(p. 26)**

- N2QAYA000153

Touch Pad Controller

➡ **(p. 27)**

- N2QBYA000019

Pedestal

➡ **(p. 10)**

Speaker

➡ **(p. 10)**

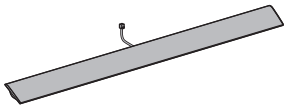

ACCESSORIES FOR SPEAKER WALL-HANGING

➡ **(p. 15)**

Cable clamp (2)

➡ **(p. 24)**

Cable tie (3)

➡ **(p. 24)**

Batteries (4)

- R03

➡ **(p. 27, 28)**

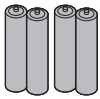

Operating Instructions

Production Registration Leaflet

- Accessories may not be placed all together. Take care not to throw them away unintentionally.

Installing the TV

Assembling / Removing the pedestal

Ⓐ **Assembly screw (4)**

M5 × 18

Ⓑ **Assembly screw (6)**

M4 × 15

Ⓒ **Base**

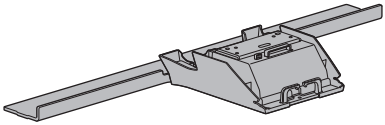

Ⓓ **Bracket**

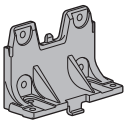

Ⓔ **Cover**

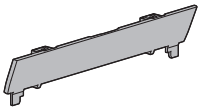

Ⓕ **Cover**

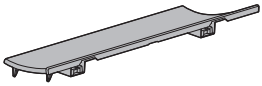

Ⓖ **Pedestal cover**

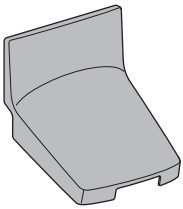

Ⓗ **Speaker**

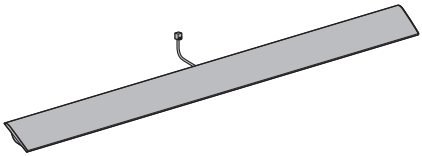

Assembling the pedestal

1

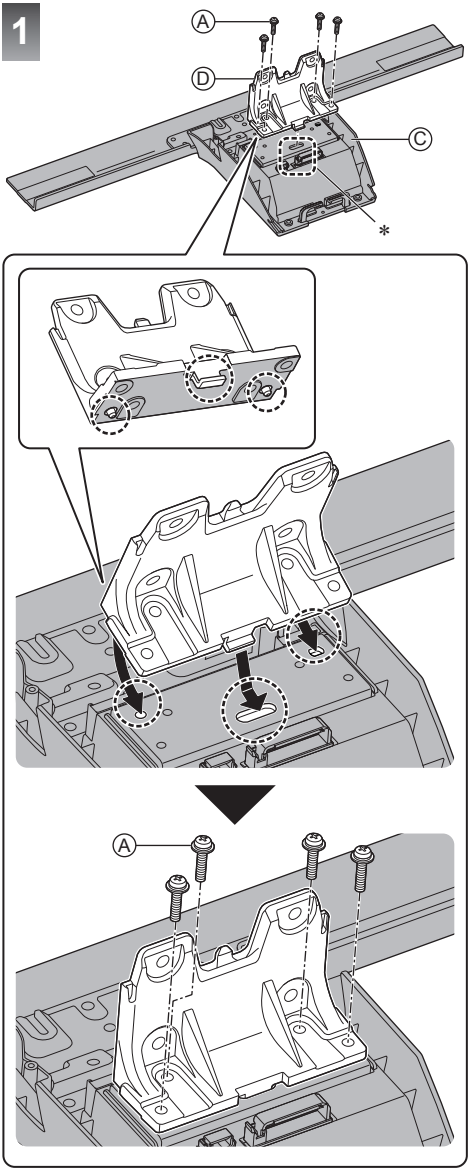

2

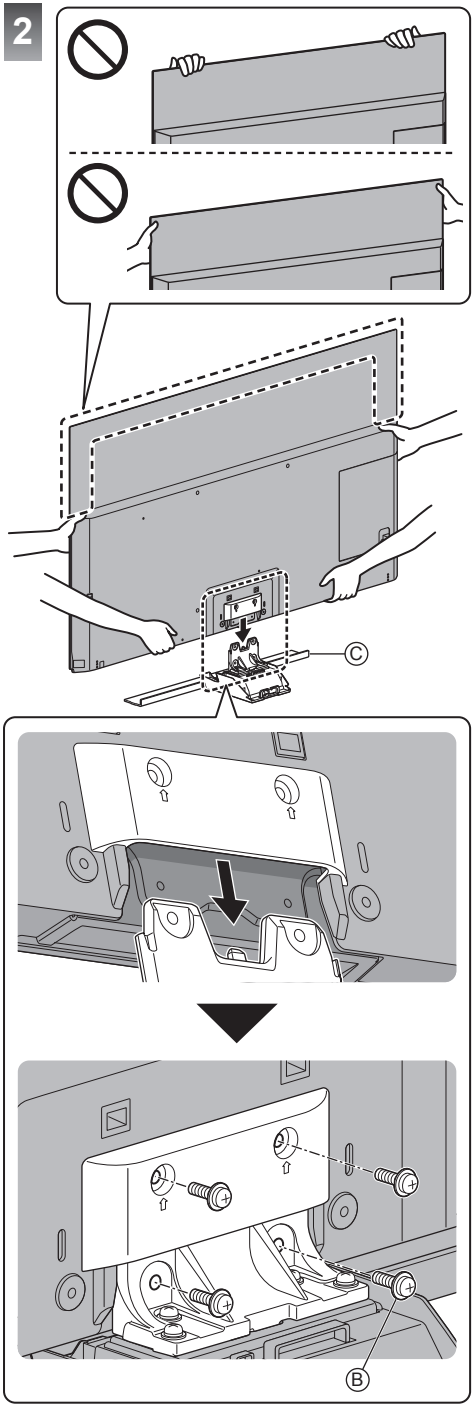

* Attach the bracket after peeling off the tape.

3

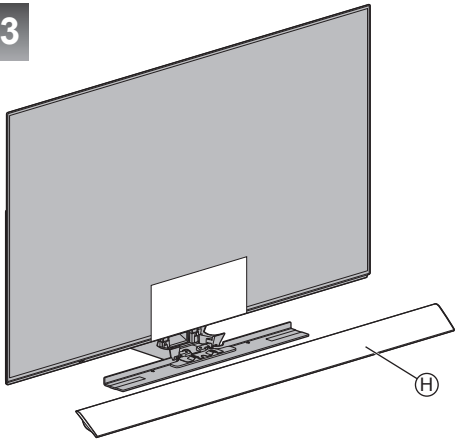

- Peel off the protection sheet after installation is complete.

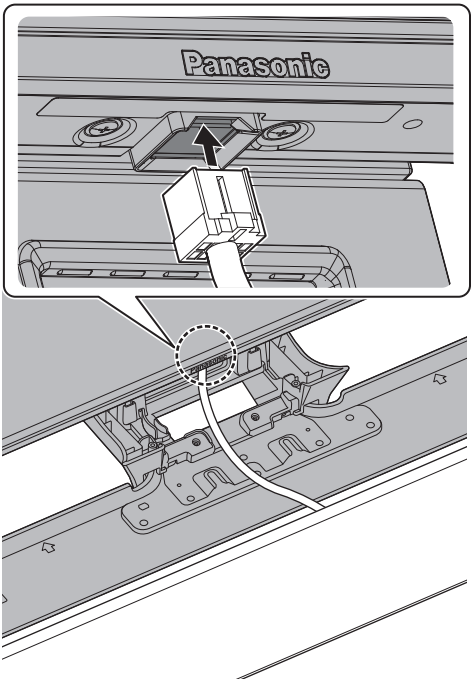

To disconnect the speaker and speaker cable

- Remove the cable direction to ② with pressing the ①.

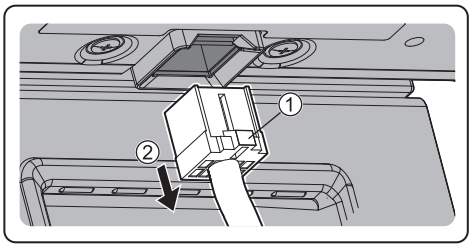

4

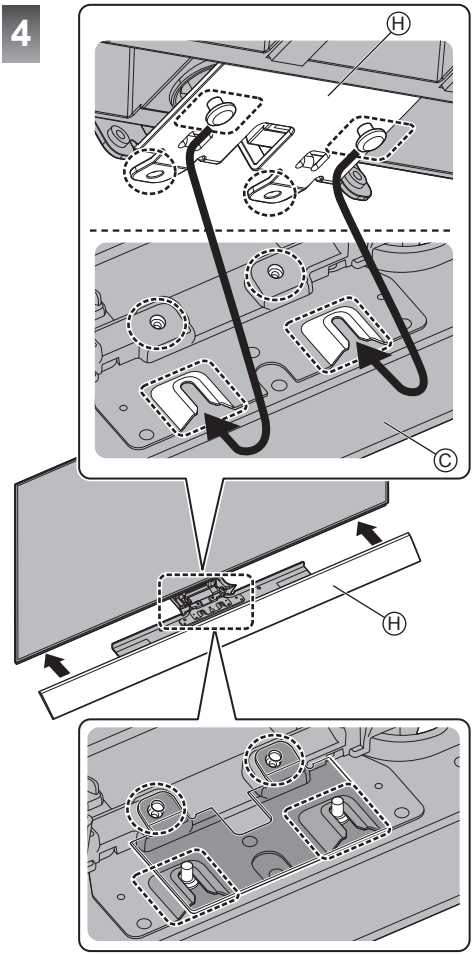

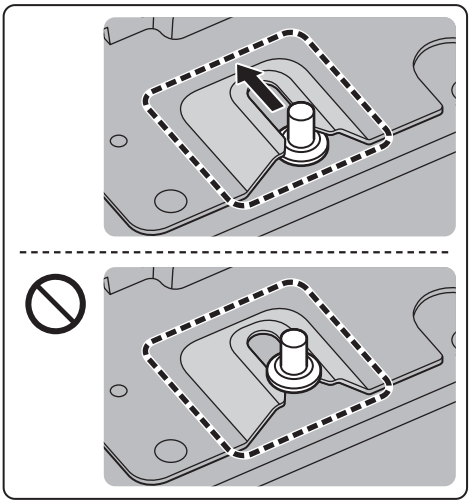

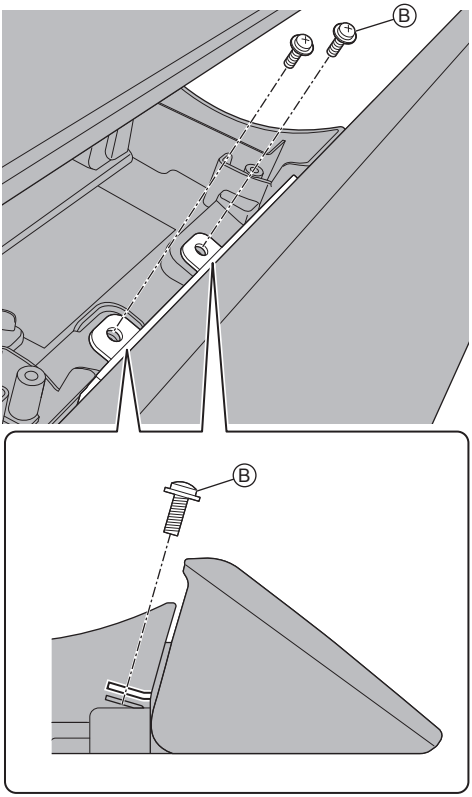

5

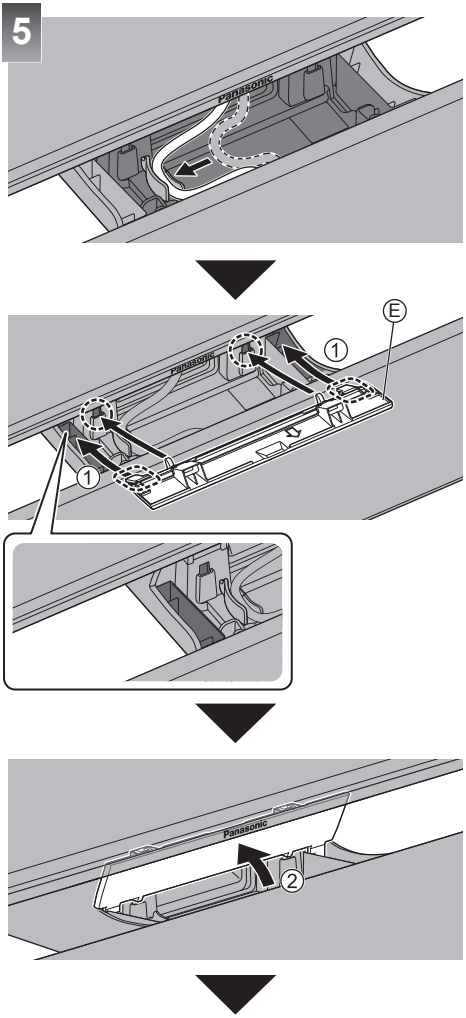

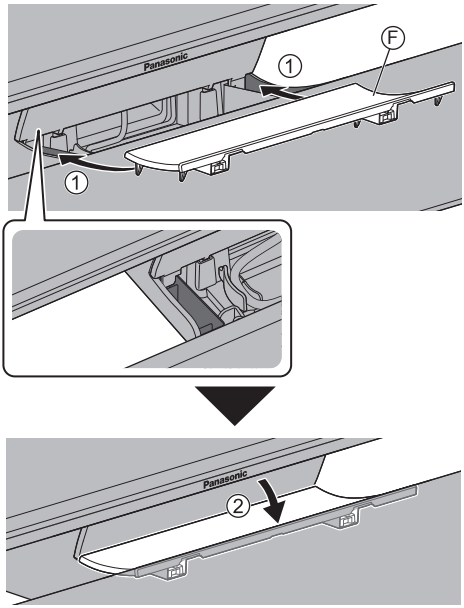

To remove the cover Ⓔ / Ⓕ

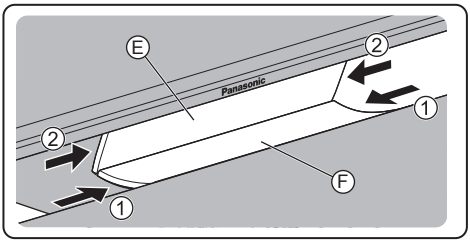

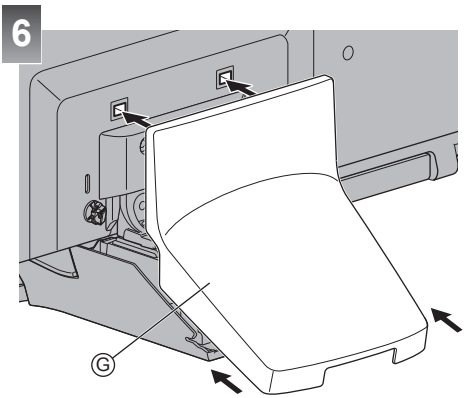

Removing the pedestal

Be sure to remove the pedestal in the following procedures when you repack the TV.

1 Remove the pedestal cover Ⓖ from the pedestal.
2 Remove the cover Ⓕ / cover Ⓔ from the pedestal.
3 Remove the assembly screws Ⓑ from the speaker.
4 Disconnect the speaker cable and remove speaker Ⓗ.
5 Remove the assembly screws Ⓑ from the TV.
6 Lift the TV from the pedestal.
7 Remove the assembly screws Ⓐ from the base.

Installing the TV and speaker

Ensure that the TV and speaker do not hang over the edge of the base.

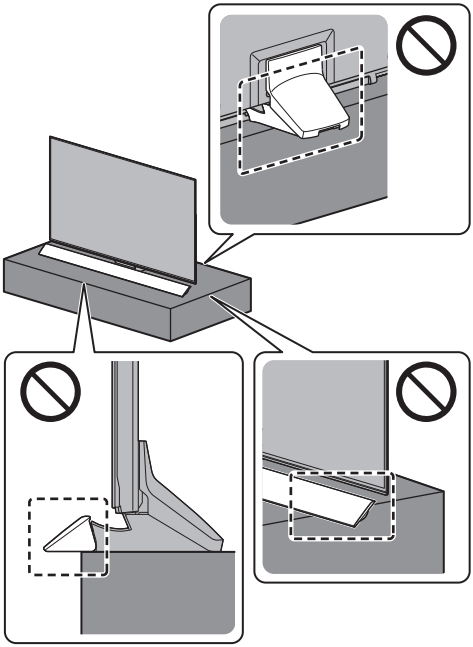

Installing the wall-hanging bracket

Professional installation is required. The installation should never be done by any other than a qualified installation specialist.

Incorrect fitting may cause equipment to fall, resulting in injury and product damage. Any such damage will void your warranty.

Accessories (wall-hanging parts)

■ Speaker

Ⓐ **Speaker**

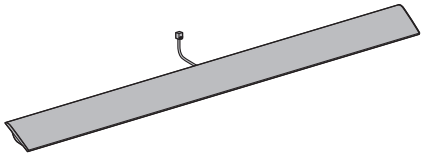

■ ACCESSORIES FOR SPEAKER WALL-HANGING

Ⓑ **Assembly screw (6)**

M4 × 10

Ⓒ **Assembly screw (2)**

M5 × 10

Ⓓ **Speaker bracket**

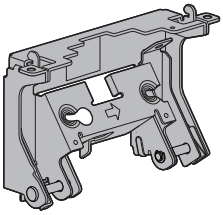

Ⓔ **Speaker holder (2)**

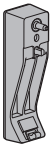

Ⓕ **Speaker cover**

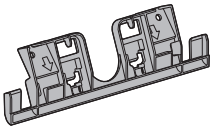

Please contact your local Panasonic dealer to purchase the recommended wall-hanging bracket.

- Holes for wall-hanging bracket installation
  Rear of the TV

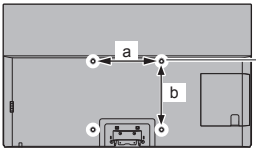

55-inch model
a: 400 mm
b: 300 mm

65-inch model
a: 400 mm
b: 400 mm

(View from the side)

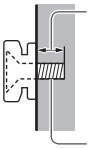

Depth of screw
minimum: 23 mm
maximum: 28 mm
Diameter: M6

Screw for fixing the TV onto the wall-hanging bracket (not supplied with the TV)

Warning

- Using other wall-hanging brackets, or installing a wall-hanging bracket by yourself have the risk of personal injury and product damage. In order to maintain the unit's performance and safety, be absolutely sure to ask your dealer or a licensed contractor to secure the wall-hanging brackets. Any damage caused by installing without a qualified installer will void your warranty.
- Carefully read the instructions accompanying optional accessories, and be absolutely sure to take steps to prevent the TV from falling off.
- Handle the TV carefully during installation since subjecting it to impact or other forces may cause product damage.
- Take care when fixing wall brackets to the wall. Always ensure that there are no electrical cables or pipes in the wall before hanging bracket.
- To prevent fall and injury, remove the TV from its fixed wall position when it is no longer in use.

■ Preparation

- Assembling the pedestal ➡(p. 11)

1

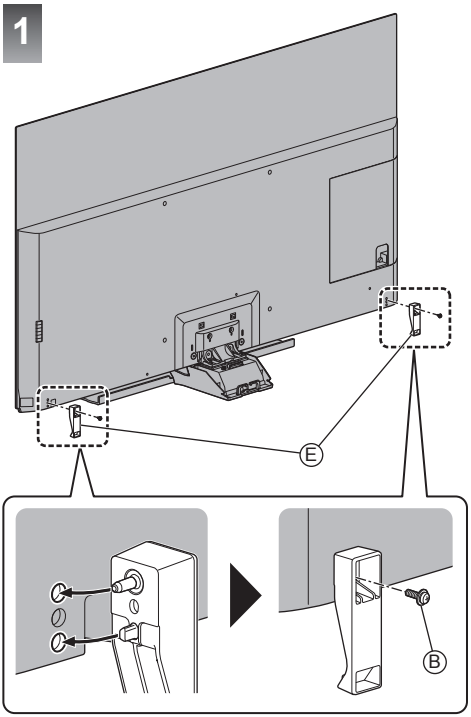

2

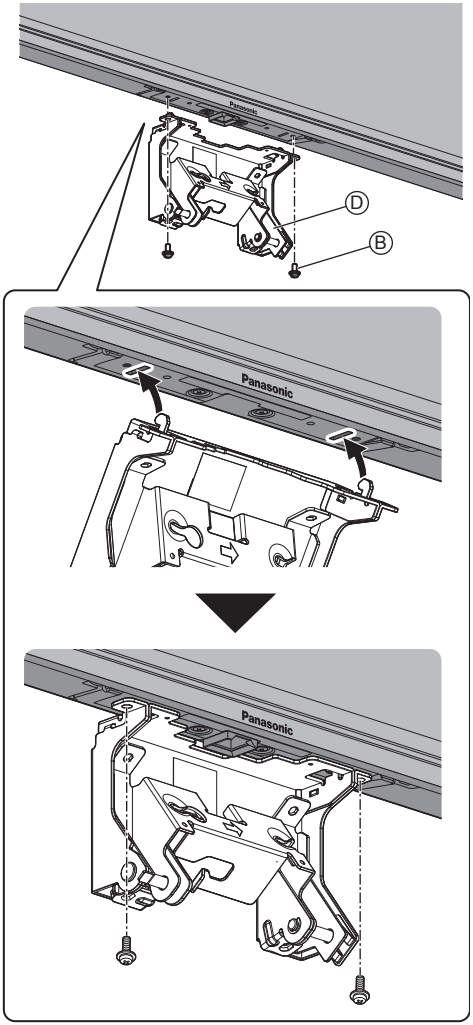

3

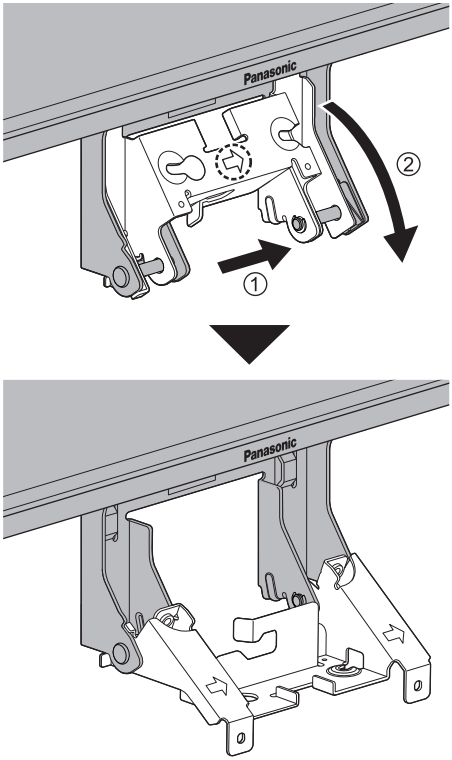

4

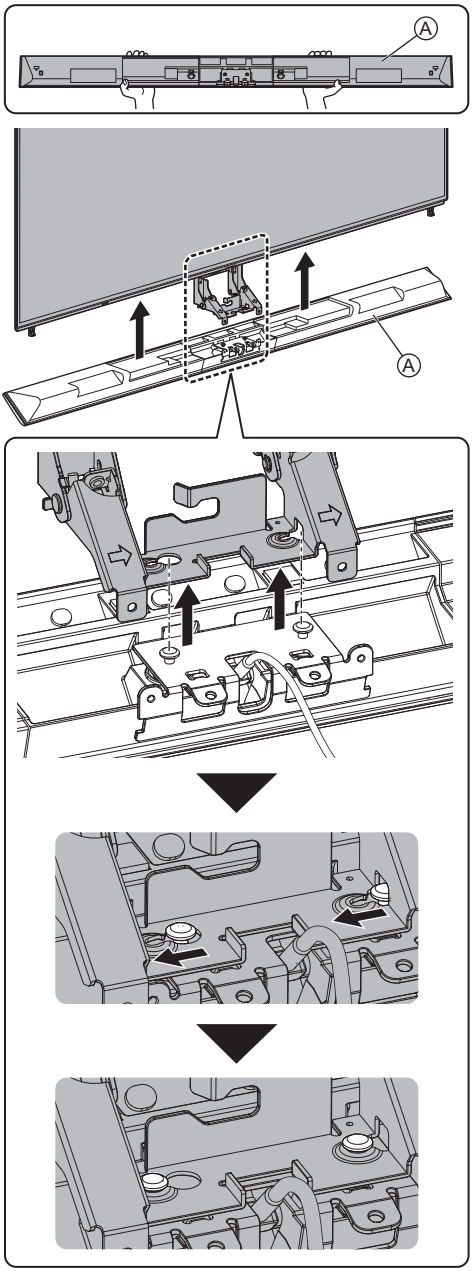

5

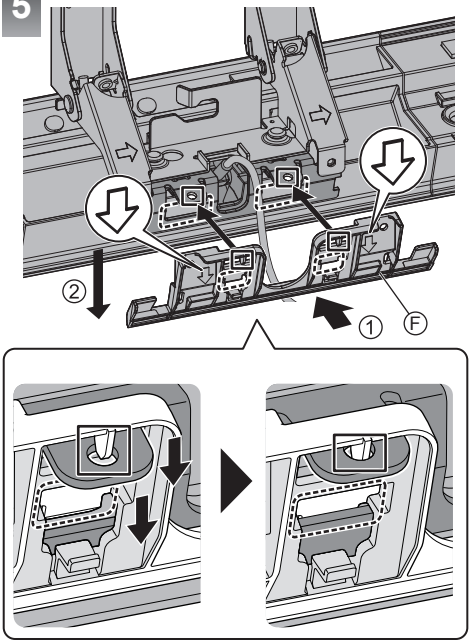

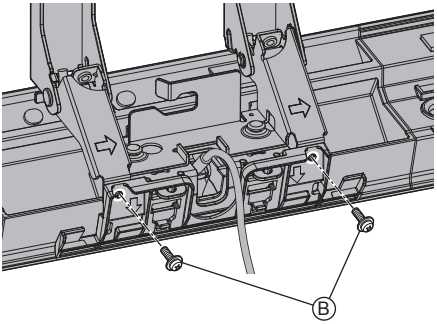

6

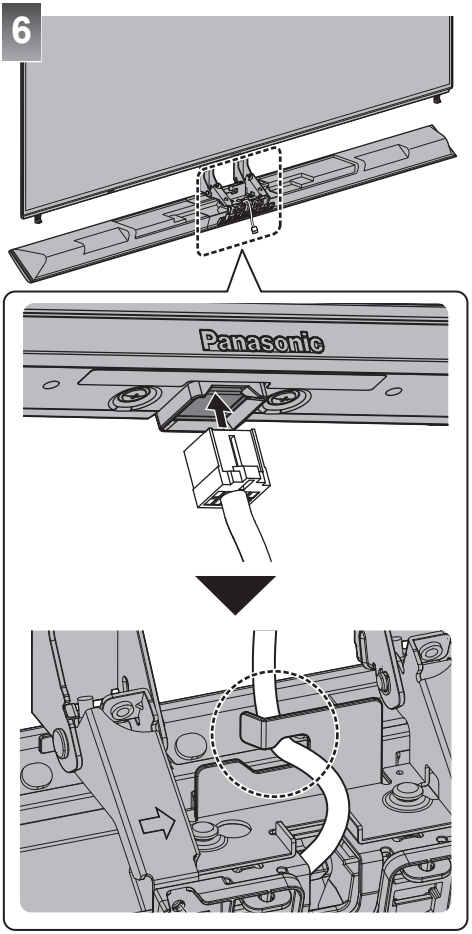

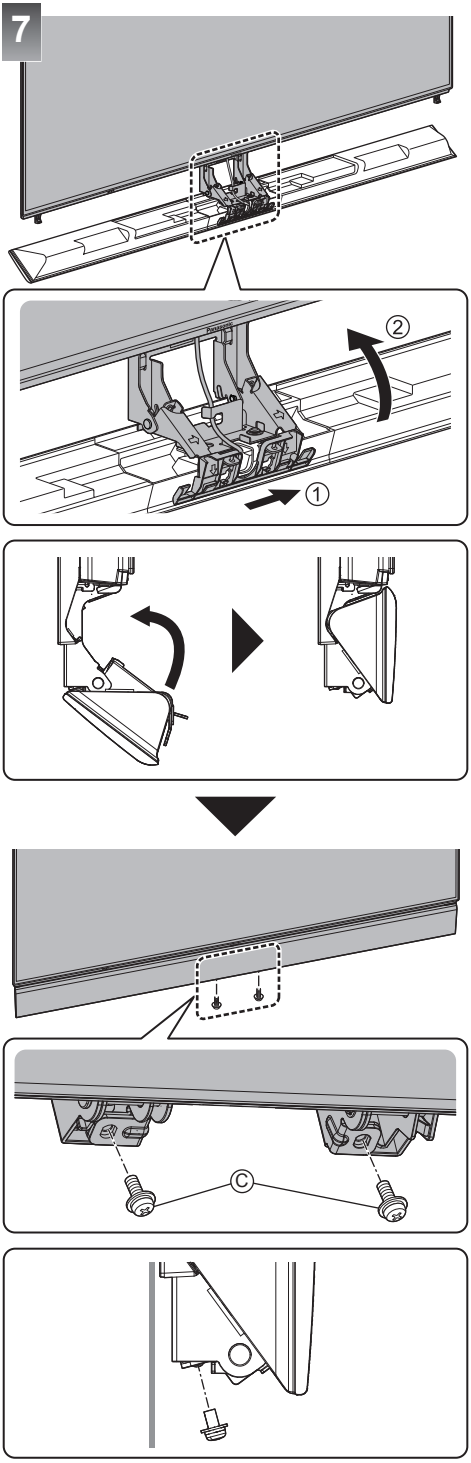

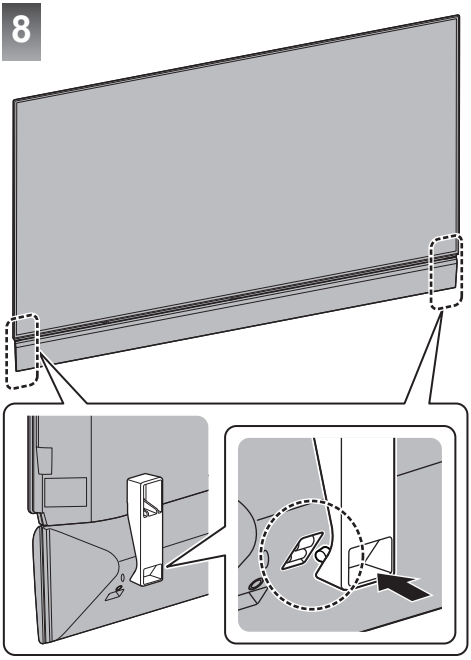

■ Removing the wall-hanging bracket

Remove the wall-hanging bracket / wall-hanging parts in the reverse order of installing.

- Before removing the TV from the wall, remove the speaker from the TV first.

  Removing the TV with speaker from the wall may cause deformation or breakage of the brackets.
- Keep the removed parts for future use.

Connections

- External equipment and cables shown are not supplied with this TV.
- Please ensure that the unit is disconnected from the mains socket before attaching or disconnecting any cables.
- Check the terminal type and cable plugs are correct for connection.
- Use a fully wired HDMI compliant cable.
- Keep the TV away from electronic equipment (video equipment, etc.) or equipment with an infrared sensor, otherwise distortion of image / sound may occur or operation of other equipment may be affected.
- Please also read the manual of the equipment being connected.

Removing the pedestal cover / terminal cover from the TV

- Be sure to remove the pedestal cover / terminal cover before connecting or disconnecting cables.
- When the connections are completed, attach the pedestal cover / terminal cover. ➡ **(p. 25)**

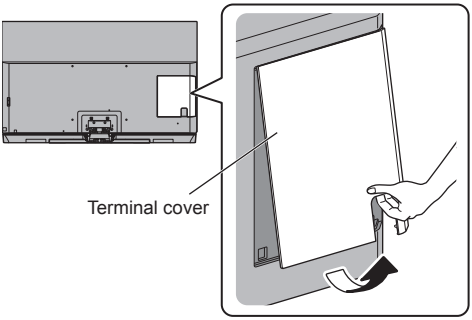

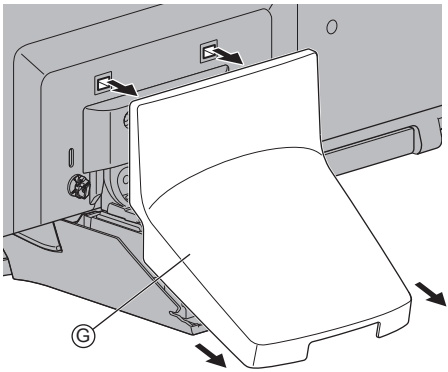

Terminals

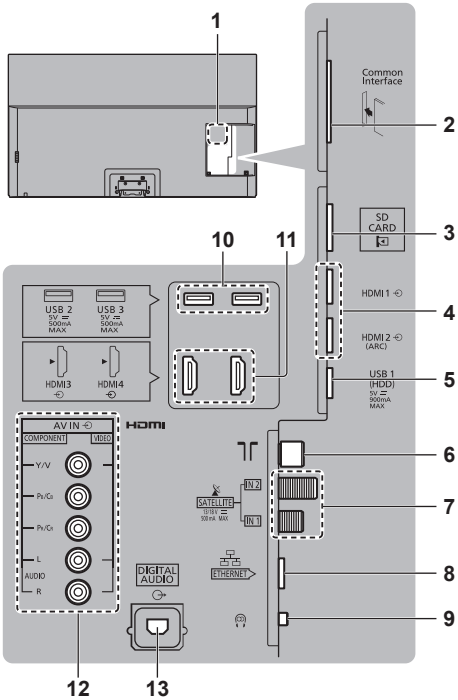

1 **Model name plate**
2 **CI slot** ➡ **(p. 23)**
3 **SD card slot**
4 **HDMI1 - 2** ➡ **(p. 21, 22, 23)**
5 **USB 1 port**
⎓ This symbol indicates DC operation
6 **Terrestrial terminal** ➡ **(p. 21)**
7 **Satellite terminal** ➡ **(p. 21)**
8 **ETHERNET terminal** ➡ **(p. 22)**
9 **Headphone jack** ➡ **(p. 23)**
10 **USB 2 - 3 port**
11 **HDMI3 - 4**
12 **AV (COMPONENT / VIDEO)** ➡ **(p. 22)**
13 **DIGITAL AUDIO**

- To watch content in 4K format, use HDMI terminal. ➡ **(p. 22)**

Basic connections

■ Mains lead

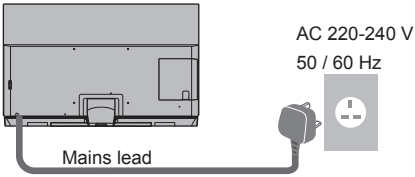

Cable tie (Bundled the mains lead)

To loosen:

To remove from the TV:

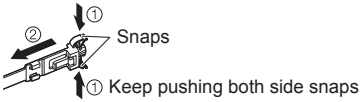

■ Aerial

TV

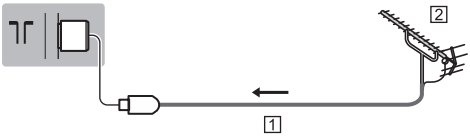

1 RF cable
2 Terrestrial aerial

- For DVB, Analogue

Satellite connection

- For Freesat, Other Sat., Satellite

■ Dual Tuner

TV

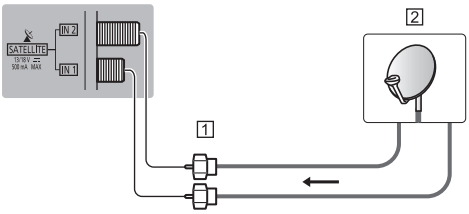

1 Satellite cables
2 Satellite dish

■ Single Tuner

TV

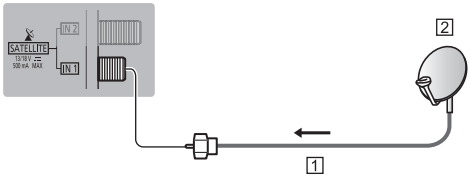

1 Satellite cable
2 Satellite dish

- To ensure your satellite dish is correctly installed, please consult your local dealer. Also consult the received satellite broadcasting companies for details.

AV devices

■ DVD Recorder / Blu-ray Recorder, etc.

TV

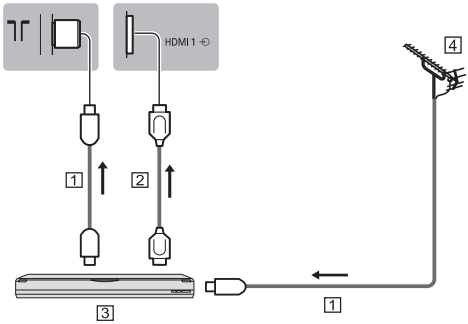

1 RF cable
2 HDMI cable
3 DVD Recorder / Blu-ray Recorder, etc.
4 Terrestrial aerial

■ Cable TV box

TV

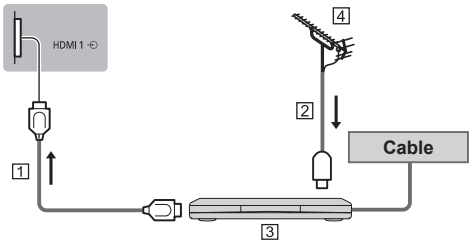

1 HDMI cable
2 RF cable
3 Cable TV box
4 Terrestrial aerial

Network

A broadband network environment is required to be able to use internet services.

- If you do not have any broadband network services, please consult your retailer for assistance.
- Prepare the internet environment for wired connection or wireless connection.
- Setup of the network connection will start when first using the TV. ➡ **(p. 29)**

■ Wired connection

TV

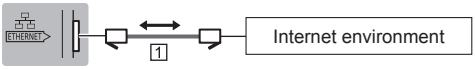

1 LAN cable (Shielded)

- Use Shielded Twist Pair (STP) LAN cable.

■ Wireless connection

1 Built-in wireless LAN (Rear of the TV)

2 Access point

Connections for 4K / HDR compatible equipment

TV

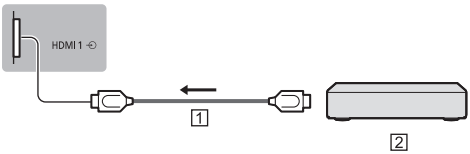

1 HDMI cable

2 4K / HDR compatible equipment

- To watch high-definition 4K more accurately or HDR content, connect the 4K compatible equipment to HDMI1 or 2 terminal.
- Connect the 4K compatible equipment to HDMI terminal using a 4K compatible cable and you can watch content in 4K format.
- Supporting HDR does not increase the peak brightness capabilities of the TV panel.

■ [HDMI Auto Setting] (Setup Menu)

Reproduces the image more precisely with the expanded colour gamut when connecting the 4K compatible equipment. Select the mode depending on the equipment.

[Mode1]:
For better compatibility. Set to [Mode1] when the image or sound in HDMI input is not played properly.
[Mode2]:
For the 4K compatible equipment that has the function to output the image precisely with the expanded colour gamut

- To change the mode
  1. Select the HDMI input mode connected to the equipment.
  2. Display the menu and select [HDMI Auto Setting] (Setup Menu).
- For information about the valid format, refer to [eHELP] (Search by Purpose > Watching > 4K resolution > HDMI Auto Setting).

Other connections

■ DVD Player

(COMPONENT equipment)

TV

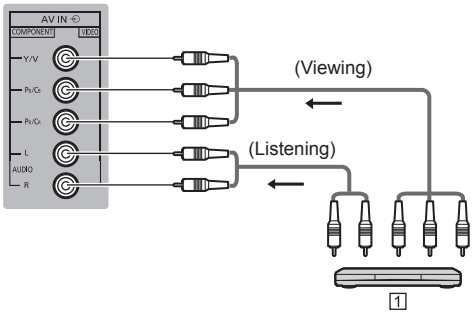

1 DVD Player

■ Camcorder / Game equipment

(VIDEO equipment)

TV

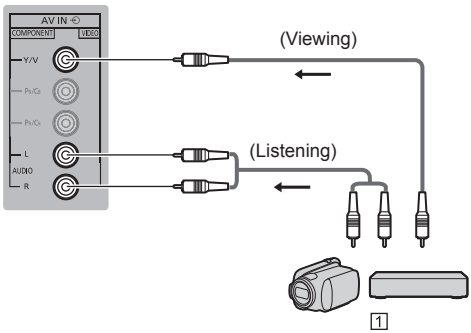

1 Camcorder / Game equipment

■ **Amplifier** (listening with external speakers)

- Use HDMI2 to connect the TV to an amplifier which has ARC (Audio Return Channel) function.

  If connecting to an amplifier without ARC function, use DIGITAL AUDIO.
- To enjoy multi-channel sound from external equipment (e.g. Dolby Digital 5.1ch), connect the equipment to the amplifier. For information about the connections, read the manuals of the equipment and amplifier.

TV

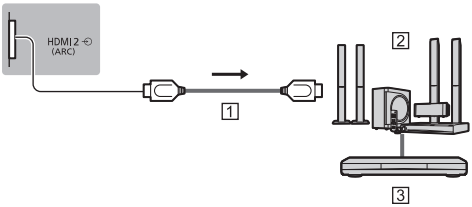

1 HDMI cable

2 Amplifier with speaker system

3 External equipment (DVD Player, etc.)

■ **Headphones**

- For information about the volume settings, refer to [eHELP] (Search by Purpose > Settings > Sound).

TV

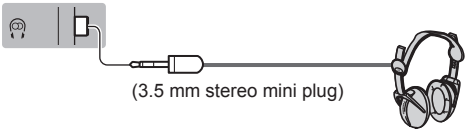

■ **Common Interface**

- Turn the TV off with Mains Power On / Off switch whenever inserting or removing the CI module.
- If a smart card and a CI module come as a set, first insert the CI module, then insert the smart card into the CI module.
- Insert or remove the CI module completely in the correct direction as shown.
- Normally encrypted channels will appear. (Viewable channels and their features depend on the CI module.)

  If encrypted channels do not appear
  ➡ **[Common Interface] in the Setup Menu**
- There might be some CI modules in the market with older firmware versions that do not work fully interoperable with this new CI+ v1.4 TV. In this case, please contact your content provider.
- For details, refer to [eHELP] (Search by Purpose > Functions > Common Interface), read the manual of the CI module, or check with the content provider.
- Be sure to remove the CI module card, etc. before repairing, transferring or discarding.

TV

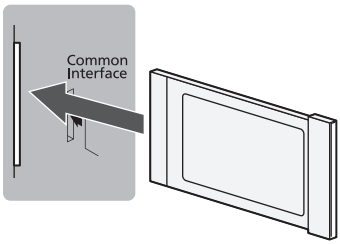

CI module

■ **USB HDD (for recording)**

- Use USB 1 port for connecting the USB HDD.
- For details, refer to [eHELP] (Search by Purpose > Recording).

■ **VIERA Link**

- Use HDMI1 - 4 for VIERA Link connection.
- For details, refer to [eHELP] (Search by Purpose > Functions > VIERA Link “HDAVI Control™”).

Cable arrangement

Fix the cables using the cable clamp, cable tie, etc. and then attach the terminal cover to the TV.

■ Fixing the Mains lead using the cable clamp

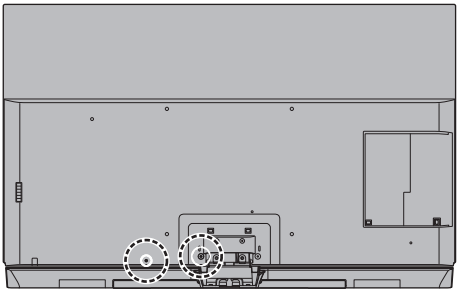

Attach the cable clamp

Insert the cable clamp in a hole

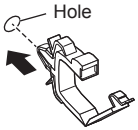

Bundle the cable

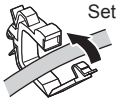

To release:

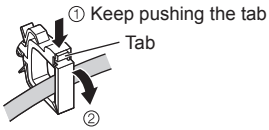

To remove from the TV:

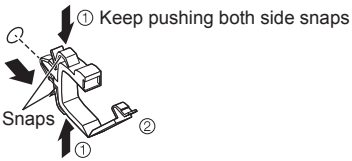

■ Fixing the cables using the cable tie

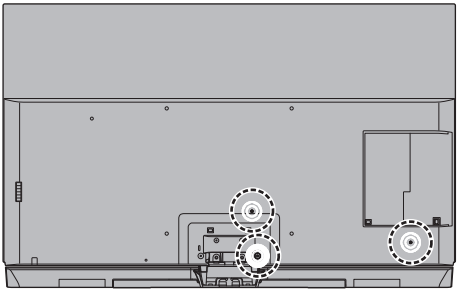

Attach the cable tie

Insert the cable tie in a hole

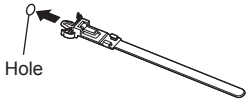

Bundle the cables

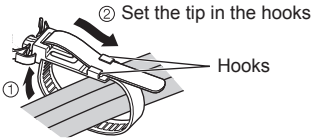

To loosen:

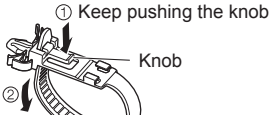

To remove from the TV:

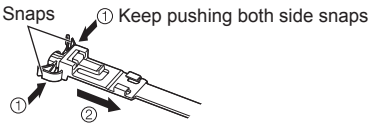

■ Fixing the cables using the cable guide

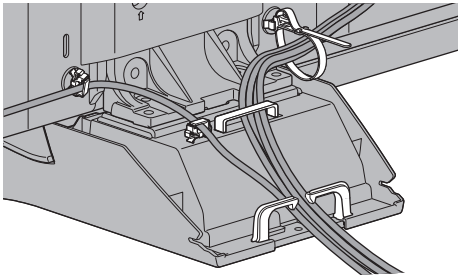

Cable guide

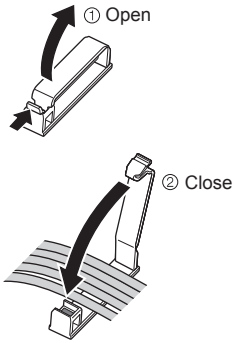

- Fix cables as necessary.
- When using the optional accessory, follow the option's assembly manual to fix cables.

■ Attaching the terminal cover / pedestal cover

- Do not apply load to the terminal cover / pedestal cover.
- Be careful not to nip the cables between the TV and the terminal cover / pedestal cover.
- When using USB 2 port, USB 3 port, AV terminal, DIGITAL AUDIO, HDMI3 terminal or HDMI4 terminal, you cannot attach the terminal cover. Keep the removed cover for future use.

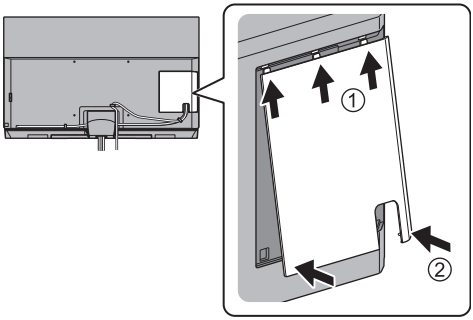

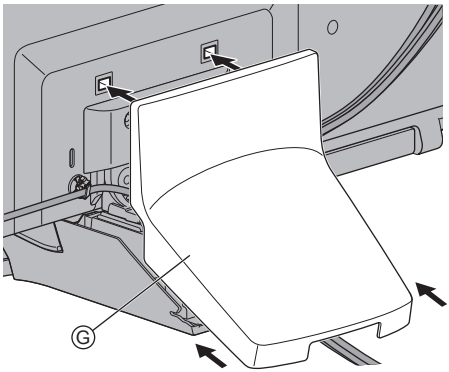

Identifying Controls

Remote Control

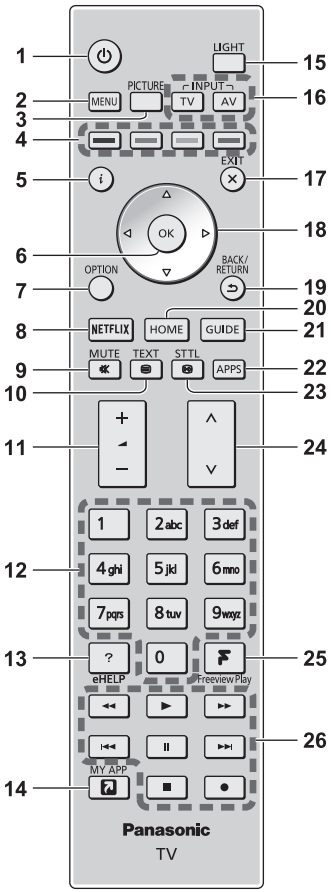

1 [⏻]: Switches TV On or Off (Standby)

2 [Main Menu]
- Press to access Picture, Sound, Network, Timer, Setup and Help Menus, etc.

3 PICTURE
- Changes Viewing Mode.

4 Coloured buttons (red-green-yellow-blue)
- Used for the selection, navigation and operation of various functions.

5 Information
- Displays channel and programme information.

6 OK
- Confirms selections and choices.
- Press after selecting channel positions to quickly change channel.

7 [Option Menu]
- Easy optional setting for viewing, sound, etc.

8 Netflix
- Accesses NETFLIX service directly.
- A broadband network environment is required in order to fully use this function.
- This service may be stopped or changed without notice.

9 Sound Mute On / Off

10 Text service button

11 Volume Up / Down

12 Numeric buttons
- Changes channel and teletext pages.
- Sets characters.
- When in Standby mode, switches TV on.

13 [eHELP]
- Displays [eHELP] (Built-in Operating Instructions).

14 [My App]
- Assigns a favourite application. After setting, starts the application easily by pressing this button.
- For details, refer to [eHELP] (Search by Purpose > Home > Apps)

15 Light
- Lights the buttons for about 5 seconds. Press again to turn off the button lights.

16 Input mode selection
- TV - switches to Freesat / DVB / Analogue / Other Sat. / Satellite.
- AV - switches to AV input mode from Input Selection list.

17 Exit
- Returns to the normal viewing screen.

18 Cursor buttons
- Makes selections and adjustments.

19 Return
- Returns to the previous menu / page.

20 HOME
- Displays [Home].
- For details, refer to [eHELP] (Read first > Features).

21 TV Guide
- Displays Electronic Programme Guide.

22 APPS
- Displays [Apps] (applications list).

23 Subtitles
- Displays subtitles.

24 Channel Up / Down

25 Freeview Play

- Accesses Freeview Play service directly.
- A broadband network environment is required in order to fully use this function.
- This service may be stopped or changed without notice.

26 Operations for contents, connected equipment, etc.

■ Installing / Removing batteries

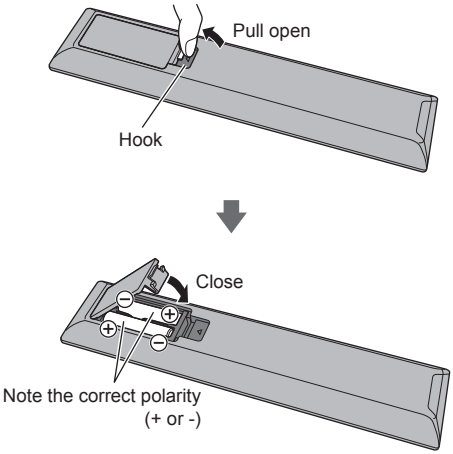

Touch Pad Controller

The Touch Pad Controller is designed for convenient and intuitive operation, especially with [Home] or internet content.

- Touch Pad Controller can be used exclusively for controlling this TV.
- Register the Touch Pad Controller to this TV with Bluetooth wireless technology before using.

  The registration starts automatically when you press any buttons (except Standby On / Off switch) after installing batteries.
- After registering, you can operate the TV without pointing this controller at the TV (except Standby On / Off switch).
- To use Standby On / Off switch, point the controller directly at the TV's remote control signal receiver because it works with the infrared sensors. (You can operate the switch without registration.)
- It is recommended to speak within approx. 15 cm from the microphone of Touch Pad Controller when using the Voice Control function.
- For details, refer to [eHELP] (Search by Purpose > Functions > Touch Pad Controller).

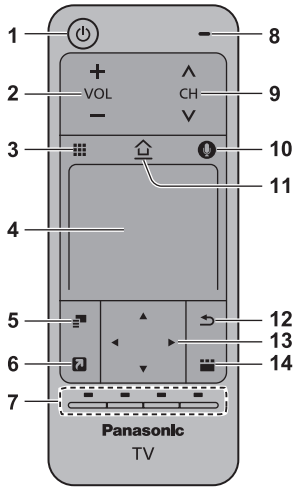

1 [⏻]: Standby On / Off switch

2 Volume Up / Down

3 On-screen remote control

- Press to display the remote control GUI (Graphical User Interface).

4 Touch pad

- For information about the operation, refer to [Operation Guide] in [Touch Pad Controller] (Setup Menu).

5 [Option Menu]

6 [My App]

- Assigns a favourite application. After setting, starts the application easily by pressing this button.
- For details, refer to [eHELP] (Search by Purpose > Home > Apps)

7 Coloured buttons (red-green-yellow-blue)

- Used for the selection, navigation and operation of various functions.

8 Microphone

9 Channel Up / Down

10 Voice Control button

- Press to use Voice Control function.

11 HOME

- Displays [Home].
- For details, refer to [eHELP] (Search by Purpose > Read first > Features).

12 Return

- Returns to the previous menu / page.

13 Cursor buttons

- Makes selections and adjustments.

14 APPS

- Displays [Apps] (applications list).

■ Installing / Removing batteries

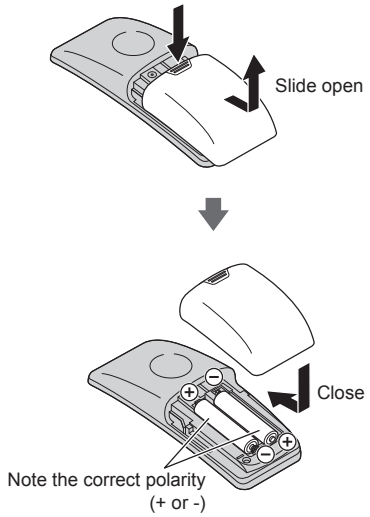

Note

- It is recommended to hold Touch Pad Controller with your hand when using.
- The battery power will be used whenever you use Touch Pad Controller (including the touch of the touch pad) even if not operating the TV. It may decrease the battery life.
- Some operations differ depending on the application.

Indicator / Control panel

- When pressing 4, 5, 6 buttons, the control panel guide appears on the right side of the screen for 3 seconds to highlight which button has been pressed.

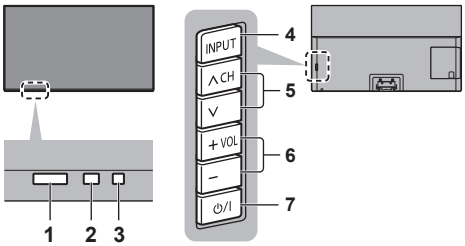

Rear side of the TV

1 Remote control signal receiver

- Do not place any objects between the TV remote control signal receiver and remote control.

2 Ambient sensor

- Senses brightness to adjust picture quality when [Ambient Sensor] in the Picture Menu is set to [On].

3 Power LED

Red:
Standby

Green:
On
- Depending on the ambient brightness, adjusts the brightness of LED to easy-to-view levels automatically.

Orange:
Standby with some functions (recording, etc.) active or panel maintenance in progress

- The LED blinks when the TV receives a command from the remote control.

4 Input mode selection

- Press repeatedly until you reach the desired mode.

[Main Menu]

- Press and hold for about 3 seconds to display main menu.

OK (when in the menu system)

5 Channel Up / Down

- Cursor Up / Down (when in the menu system)

6 Volume Up / Down

- Cursor Left / Right (when in the menu system)

7 Mains power On / Off switch

- Use to switch the mains power.
- To turn Off the apparatus completely, you must pull the mains plug out of the mains socket.
- [⏻/|]: Standby / On

Panel maintenance

Be sure to turn the TV off with the remote control to perform the panel maintenance. During the panel maintenance, LED turns to orange.

During panel maintenance, avoid touching and exerting any pressure on the screen. (e.g. wiping the screen, etc.)

There are two types of the maintenance as following.

1 Normal maintenance automatically starts, and it takes approx. 10 minutes.

2 Regular maintenance takes approx. 80 minutes.

- When regular maintenance is necessary, the message appears on the screen after turning the TV off with the remote control. Follow the on-screen instructions.
- During the panel maintenance, a white horizontal line appears on the screen for a while. This is not a malfunction.

- For information about panel maintenance, refer to [eHELP] (Search by Purpose > Watching > For best picture > Screen Settings)

First time Auto Setup

When the TV is turned on for the first time, it will automatically search for available TV channels and give options to set up the TV.

- These steps are not necessary if the setup has been completed by your local dealer.
- Please complete connections (p. 20 - 25) and settings (if necessary) of the connected equipment before starting Auto Setup. For information about the settings for the connected equipment, read the manual of the equipment.

1 Plug the TV into a live mains socket and turn the power on

- Takes a few seconds to be displayed.

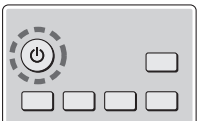

2 Select the following items

Set up each item by following the on-screen instructions.

Example:

■ How to use the remote control

Move the cursor

Access the item / store the setting

Return to the previous item (if available)

When the speaker is not connected to the TV, [Speaker Connection Check] screen appears

- Ensure the speaker connection is completed (p. 12) and press the OK button.
- When the speaker is not connected to the TV, turn the TV off with the remote control and connect the speaker at first. ➡**(p. 12)**

Select [Home]

Select [Home] for use in a home viewing environment.

- [Shop] is for shop display.
- To change the viewing environment later on, the set will need to have all settings initialised by accessing Shipping Condition.

Set up the network connection

Select your country

- Auto Setup screen varies depending on the country and the signal mode.
- [Satellite Antenna Setup]

  Ensure the satellite connections are completed (p. 21) and select the tuner mode ([Dual Tuner] / [Single Tuner]).

Select your region UK only

Auto Setup is now complete and the TV is ready for viewing.

If tuning has failed check the Satellite cable, RF cable, and the network connection, and then follow the on-screen instructions.

Note

- The TV goes into Standby mode when no operation is performed for 4 hours if [Auto Standby] in the Timer Menu is set to [On].
- The TV goes into Standby mode when no signal is received and no operation is performed for 10 minutes if [No signal Power off] in the Timer Menu is set to [On].
- To retune all channels
  ➡ **[Auto Setup] in [Tuning Menu] (Setup Menu)**
- To add the available TV signal mode later
  ➡ **[Add TV Signal] in [Tuning Menu] (Setup Menu)**
- To initialise all settings
  ➡ **[Shipping Condition] in [System Menu] (Setup Menu)**

Watching TV

1 Turn power on

(TV)

or

(Remote Control)

- Mains power On / Off switch should be on.
  ➡ **(p. 28)**

Displays the information bar at the bottom of the screen for several seconds.

- For information about the operation and settings, refer to [eHELP]. (Search by Purpose > Read first > Features)

2 Select the mode

TV

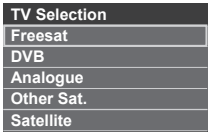

- Selectable modes vary depending on the stored channels and selected country.

3 Select a channel

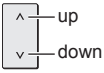

or

- Freesat channel position numbers are in the 101 - 999 and 0101 - 0999 ranges. DVB and Other Sat. / Satellite channel position begin from number 1 upward. Analogue channel position numbers are in the 0 - 99 range.

How to Use eHELP

[eHELP] is the detailed operating instructions built into the TV, and gives a more detailed explanation for a better understanding of the operation of each feature.

1 Display [eHELP]

or

- If the [eHELP] has been accessed previously since the TV was turned on, the confirmation screen is displayed to select whether to go to the [First page] or to the [Last viewed page].

2 Select the menu

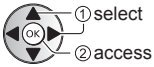

- To access [How to use]

  (green)

[Keyword Search]:
Search the content of eHELP in the keyword.

[Search by Purpose]:
Search the content of eHELP for each item.

[Support]:
Access the support information (FAQs, etc.).

3 Select the item

Example:

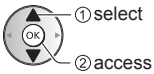

- To return to the previous screen / field

- To scroll the description (if more than 1 page)
  While the description is highlighted

- To open the reference screen ( )

- To display the menu related to the description (only for some descriptions)
  (red)
- To check the features of this TV
  Search by Purpose > Read first > Features

FAQs

Before requesting service or assistance, please follow these simple guides to solve the problem.

- For details, refer to [eHELP] (Support > FAQs).

It takes several seconds to display the image after turning the TV on

- When turning the TV on, the panel adjustment is performed. It is not a malfunction.

The TV does not switch on

- Check the mains lead is plugged into the TV and the mains socket.
- The fuse in the mains plug may have blown. Replace it with one of an identical rating. ➡ **(p. 5)**

The TV goes into Standby mode

- Auto power standby function is activated.

The remote control does not work or is intermittent

- Are the batteries installed correctly? ➡ **(p. 27)**
- Has the TV been switched on?
- The batteries may be running low. Replace them with new ones.
- Point the remote control directly at the TV's remote control signal receiver (within about 7 m and a 30 degree angle of the signal receiver).
- Situate the TV away from sunshine or other sources of bright light so they do not shine on the TV's remote control signal receiver.

No image is displayed

- Check the TV is turned on.
- Check the mains lead is plugged into the TV and the mains socket.
- Check the correct input mode is selected.
- Check the setting of [AV] ([COMPONENT] / [VIDEO]) in [Input Selection] to match the signal being output by the external equipment.
- Is [Luminance Level], [Contrast], [Brightness] or [Colour] in the Picture Menu set to the minimum?
- Check all required cables and connections are firmly in place.

An unusual image is displayed

- This TV has a built-in Self Test. Makes a diagnosis of picture or sound problems.
  ➡ **[TV Self Test] (Help Menu)**
- Turn the TV off with Mains power On / Off switch, then turn it on again.
- If the problem persists, initialise all settings.
  ➡ **[Shipping Condition] in [System Menu] (Setup Menu)**

The image or sound from external equipment are unusual when the equipment is connected via HDMI

- Set [HDMI Auto Setting] (Setup Menu) to [Mode1]
  ➡ **(p. 22)**

Parts of the TV become hot

- Parts of the TV may become hot. These temperature rises do not pose any problems in terms of performance or quality.

When pushed with a finger, the display panel moves slightly and makes a noise

- There is a little gap around the panel to prevent damage to the panel. This is not a malfunction.

About the inquiry

- Please contact your local Panasonic dealer for assistance.

  If you make an inquiry from a place where this TV is not present, we cannot answer about contents that require visual confirmation for connection, phenomenon, etc. of this TV itself.

LED turns to orange

- Panel maintenance may be in progress.

  LED turns to orange again in standby mode when the TV is turned on / off before the panel maintenance is completed.

  (Be sure to turn the TV off with the remote control to perform the panel maintenance.)
- During panel maintenance, avoid touching and exerting any pressure on the screen. (e.g. wiping the screen, etc.)
- For more information
  ➡ **"Panel maintenance" (p. 28)**

The panel maintenance notification is displayed when turning the TV off with Standby On / Off switch of the TV's remote control.

- Perform the panel maintenance. Select [Turn the TV off now] and press OK button to start the panel maintenance.
- The panel maintenance is interrupted when selecting [Don't start panel maintenance this time] or turning the TV off while the notification is displayed.

  The notification is displayed again when turning the TV off with Standby On / Off switch of the TV's remote control next time.
- For more information
  ➡ **"Panel maintenance" (p. 28)**

A white horizontal line appears in Standby mode.

- A white horizontal line may appear on the screen for a while to adjust the panel. This is not a malfunction.

Check you can get Freeview HD in your area by visiting www.freeview.co.uk

To get the most up to date service from Freeview it is important for Freeview customers to retune from time to time.

How do I re-tune my Freeview TV ?

This is a quick reference. If you have any problems, check the Operating Instructions or ask a friend or family member to show you how. Alternatively, go to your local electrical retailer, contact your local Panasonic dealer or visit **freeview.co.uk/retune**

Re-tuning only takes a few minutes, just follow the steps below:

1. Press the TV button to select DVB mode.
2. Press the MENU button to open the main menu.
3. [Setup] ➡ [DVB Tuning Menu] ➡ [Auto Setup]

Please note: most digital TV recorders will keep your original recordings after running a re-tune but you will need to reset any future recordings.

Maintenance

First, remove the mains plug from the mains socket.

Display panel, Cabinet, Pedestal

Regular care:
Gently wipe the surface of the display panel, cabinet, or pedestal by using a soft cloth to remove dirt or fingerprints.

For stubborn dirt:
(1) First clean the dust from the surface.
(2) Dampen a soft cloth with clean water or diluted neutral detergent (1 part detergent to 100 parts water).
(3) Wring out the cloth firmly. (Please note, do not let liquid enter the TV inside as it may lead to product failure.)
(4) Carefully wipe moisten and wipe away the stubborn dirt.
(5) Finally, wipe away all the moisture.

Caution

- Do not use a hard cloth or rub the surface too hard, otherwise this may cause scratches on the surface.
- Take care not to subject the surfaces to insect repellent, solvent, thinner or other volatile substances. This may degrade surface quality or cause peeling of the paint.
- The surface of the display panel is specially treated and may be easily damaged. Take care not to tap or scratch the surface with your fingernail or other hard objects.
- Do not allow the cabinet and pedestal to make contact with a rubber or PVC substance for a long time. This may degrade surface quality.

Speaker

Clean the speaker with a soft, dry cloth.

Caution

- When cleaning the speaker, use a fine cloth. Do not use tissues or other materials (towels, etc.) that can fall apart. Small grains may get stuck inside the speaker cover.
- Do not wipe the speaker net with a wet cloth.
- Never use alcohol, paint thinner or benzine to clean the speaker.
- Before using chemically-treated cloth, carefully read the instructions that came with the cloth.

Mains plug

Wipe the mains plug with a dry cloth at regular intervals. Moisture and dust may cause fire or electrical shock.

Specifications

■ TV

Model No.

55-inch model: TX-55FZ952B
65-inch model: TX-65FZ952B

Dimensions (W × H × D)

55-inch model

1 228 mm × 785 mm × 330 mm
(With Pedestal and speaker)

1 228 mm × 817 mm × 70 mm
(With speaker (using “ACCESSORIES FOR SPEAKER WALL-HANGING”))

1 228 mm × 713 mm × 62 mm (TV only)

65-inch model

1 449 mm × 909 mm × 330 mm
(With Pedestal and speaker)

1 449 mm × 941 mm × 70 mm
(With speaker (using “ACCESSORIES FOR SPEAKER WALL-HANGING”))

1 449 mm × 837 mm × 62 mm (TV only)

Mass

55-inch model

29.0 kg Net (With Pedestal and speaker)

21.0 kg Net (TV only)

2.5 kg Net (Speaker only)

65-inch model

36.0 kg Net (With Pedestal and speaker)

27.0 kg Net (TV only)

3.0 kg Net (Speaker only)

Power source

AC 220-240 V, 50 / 60 Hz

Panel

OLED panel

Sound

Speaker output

80 W (20 W × 2 + 20 W × 2)

Headphones

3.5 mm stereo mini jack × 1

Connection terminals

AV input (COMPONENT / VIDEO)

VIDEO

Pin jack × 1

1.0 V[p-p] (75 Ω)

AUDIO L - R

Pin jack × 2

0.5 V[rms]

Y

1.0 V[p-p] (including synchronisation)

PB/CB, PR/CR

±0.35 V[p-p]

HDMI 1 / 2 / 3 / 4 input

TYPE A Connectors

HDMI1 / 3 / 4:
4K, Content Type, Deep Colour, x.v.Colour™

HDMI2:
4K, Content Type, Audio Return Channel, Deep Colour, x.v.Colour™

- This TV supports “HDAVI Control 5” function.

Card slot

SD Card slot × 1

Common Interface slot (complies with CI Plus) × 1

ETHERNET

RJ45, IEEE802.3 10BASE-T / 100BASE-TX

USB 1 / 2 / 3

USB1: DC ⎓ 5 V, Max. 900 mA [SuperSpeed USB (USB 3.0)]

USB2 / 3: DC ⎓ 5 V, Max. 500 mA [Hi-Speed USB (USB 2.0)]

DIGITAL AUDIO output

PCM / Dolby Digital, Fibre optic

Receiving systems / Band name

UK

DVB-S / S2

(Freesat / Other Sat.)

Freesat services via Satellite dish input

Receiver frequency range - 950 MHz to 2 150 MHz

Not available for DiSEqC control

Ireland

DVB-S / S2

Receiver frequency range - 950 MHz to 2 150 MHz

Not available for DiSEqC control

DVB-T / T2

Digital terrestrial services

UK

PAL I

UHF E21 - 68

Ireland

PAL I

VHF A - J

CATV S1 - S20

UHF E21 - E69

CATV S21 - S41 (Hyperband)

PAL 525/60

Playback of NTSC tape from some PAL Video recorders (VCR) or NTSC disc playback from DVD player and recorder

---

M.NTSC

Playback from M.NTSC Video recorders (VCR)

NTSC (AV input only)

Playback from NTSC Video recorders (VCR)

Satellite dish input

Female F-type 75 Ω × 2

Aerial input

UK

UHF

Ireland

VHF / UHF

Operating conditions

Temperature

0 °C - 35 °C

Humidity

20 % - 80 % RH (non-condensing)

Built-in wireless LAN

Standard compliance and Frequency range[*1]

IEEE802.11a/n

5.180 GHz - 5.320 GHz, 5.500 GHz - 5.580 GHz, 5.660 GHz - 5.700 GHz

IEEE802.11b/g/n

2.412 GHz - 2.472 GHz

Security

WPA2-PSK (TKIP/AES)

WPA-PSK (TKIP/AES)

WEP (64 bit/128 bit)

Bluetooth wireless technology[*2]

Standard Compliance

Bluetooth 3.0

Frequency Range

2.402 GHz - 2.480 GHz

*1: The frequency and channel differ depending on the country.

*2: Not all the Bluetooth compatible devices are available with this TV. Up to 5 devices can be used simultaneously (except Touch Pad Controller).

Note

- Touch Pad Controller uses Bluetooth wireless technology.
- Design and Specifications are subject to change without notice. Mass and Dimensions shown are approximate.
- For information about the power consumption, display resolution, etc., refer to Product fiche.
- For information about the open source software, refer to [eHELP] (Search by Purpose > Read first > Before use > Licence).

Disposal of Old Equipment and Batteries

Only for European Union and countries with recycling systems

These symbols on the products, packaging, and/or accompanying documents mean that used electrical and electronic products and batteries must not be mixed with general household waste.

For proper treatment, recovery and recycling of old products and used batteries, please take them to applicable collection points in accordance with your national legislation.

By disposing of them correctly, you will help to save valuable resources and prevent any potential negative effects on human health and the environment.

For more information about collection and recycling, please contact your local municipality.

Penalties may be applicable for incorrect disposal of this waste, in accordance with national legislation.

Note for the battery symbol (bottom symbol):

This symbol might be used in combination with a chemical symbol. In this case it complies with the requirement set by the Directive for the chemical involved.

Sales and Support Information

Customer Communications Centre

- For customers within the UK: **0344 844 3899**
- For customers within Ireland: **01289 8333**
- Monday − Friday 9:00am − 5:00pm, (Excluding public holidays).
- For further support on your product, please visit our website: **www.panasonic.co.uk**

Direct Sales at Panasonic UK

- Order accessory and consumable items for your product with ease and confidence by phoning our Customer Communications Centre Monday − Friday 9:00am − 5:00pm, (Excluding public holidays).
- Or go on line through our Internet Accessory ordering application at **www.pas-europe.com**.
- Most major credit and debit cards accepted.
- All enquiries transactions and distribution facilities are provided directly by Panasonic UK.
- It couldn't be simpler!
- Also available through our Internet is direct shopping for a wide range of finished products. Take a browse on our website for further details.

Customer's Record

The model number and serial number of this product may be found on the model name plate and serial number label located on the rear panel (when the terminal cover is removed.). You should note this serial number in the space provided below and retain this book, plus your purchase receipt, as a permanent record of your purchase to aid in identification in the event of theft or loss, and for Warranty Service purposes.

Model Number **Serial Number**

English

Panasonic UK, a branch of Panasonic Marketing Europe GmbH
Willoughby Road, Bracknell, Berkshire, RG12 8FP
Web Site: http://www.panasonic.com

© Panasonic Corporation 2018

Printed in the Czech Republic
03-2018